Curs 5

2020/2021

Dispozitive şi circuite de microunde pentru radiocomunicații

Disciplina 2020/2021

- 2C/1L, **DCMR (CDM)**
- **Minim 7 prezente (curs+laborator)**
- Curs - **conf. Radu Damian**
  - Vineri 8-10, Online/Video, Microsoft Teams
  - E – **50%** din nota
  - **probleme** + (2p prez. curs) + (3 teste) + (bonus activitate)
    - primul test C2: 16.10.2020 (t2 si t3 neanuntate **~ C7, C12**)
    - 3pz (C) ≈ +0.5p (**2p** max)
  - **toate materialele permise**

Online

- acces la **examene** necesita **parola** primita prin email

Cuprins

- Linii de transmisie
- Adaptarea de impedanța
- Cuploare direcționale
- Divizoare de putere
- Amplificatoare de microunde
- Filtre de microunde
- Oscilatoare de microunde ?

Bibliografie

- http://rf-opto.etti.tuiasi.ro
- Irinel Casian-Botez: "Microunde vol. 1: Proiectarea de circuit", Ed. TEHNOPRES, 2008
- **David Pozar, Microwave Engineering, Wiley; 4th edition , 2011, ISBN : 978-1-118-29813-8 (E), ISBN : 978-0-470-63155-3 (P)**

Examen: Reprezentare logaritmică

$dB = 10 \cdot \log_{10} (P_2 / P_1)$

0 dB	= 1
+ 0.1 dB	= 1.023 (+2.3%)
+ 3 dB	= 2
+ 5 dB	= 3
+ 10 dB	= 10
-3 dB	= 0.5
-10 dB	= 0.1
-20 dB	= 0.01
-30 dB	= 0.001

$dBm = 10 \cdot \log_{10} (P / 1\ mW)$

0 dBm	= 1 mW
3 dBm	= 2 mW
5 dBm	= 3 mW
10 dBm	= 10 mW
20 dBm	= 100 mW
-3 dBm	= 0.5 mW
-10 dBm	= 100 μW
-30 dBm	= 1 μW
-60 dBm	= 1 nW

[dBm] + [dB] = [dBm]

[dBm/Hz] + [dB] = [dBm/Hz]

[x] + [dB] = [x]

Examen: numere complexe

- Operatii cu numere complexe!
- $z = a + j \cdot b$; $j^2 = -1$

Cuprins

- Linii de transmisie
- Adaptarea de impedanța
- Cuploare direcționale
- Divizoare de putere
- Amplificatoare de microunde
- Filtre de microunde
- Oscilatoare de microunde ?

Linie fara pierderi

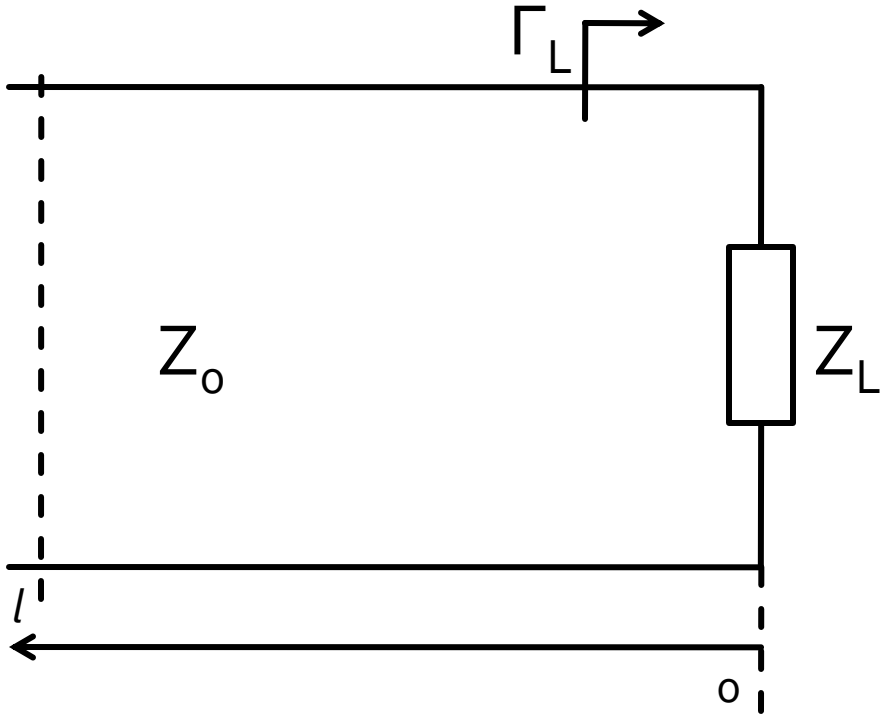

$$V(z) = V_0^+ e^{-j\cdot\beta\cdot z} + V_0^- e^{j\cdot\beta\cdot z}$$

$$I(z) = \frac{V_0^+}{Z_0} e^{-j\cdot\beta\cdot z} - \frac{V_0^-}{Z_0} e^{j\cdot\beta\cdot z}$$

$$Z_L = \frac{V(0)}{I(0)} \qquad Z_L = \frac{V_0^+ + V_0^-}{V_0^+ - V_0^-} \cdot Z_0$$

- coeficient de reflexie in tensiune

$$\boxed{\Gamma = \frac{V_0^-}{V_0^+} = \frac{Z_L - Z_0}{Z_L + Z_0}}$$

- Z_o real

Linie fara pierderi

- impedanta la intrarea liniei de impedanta caracteristica Z_o, de lungime l, terminata cu impedanta Z_L

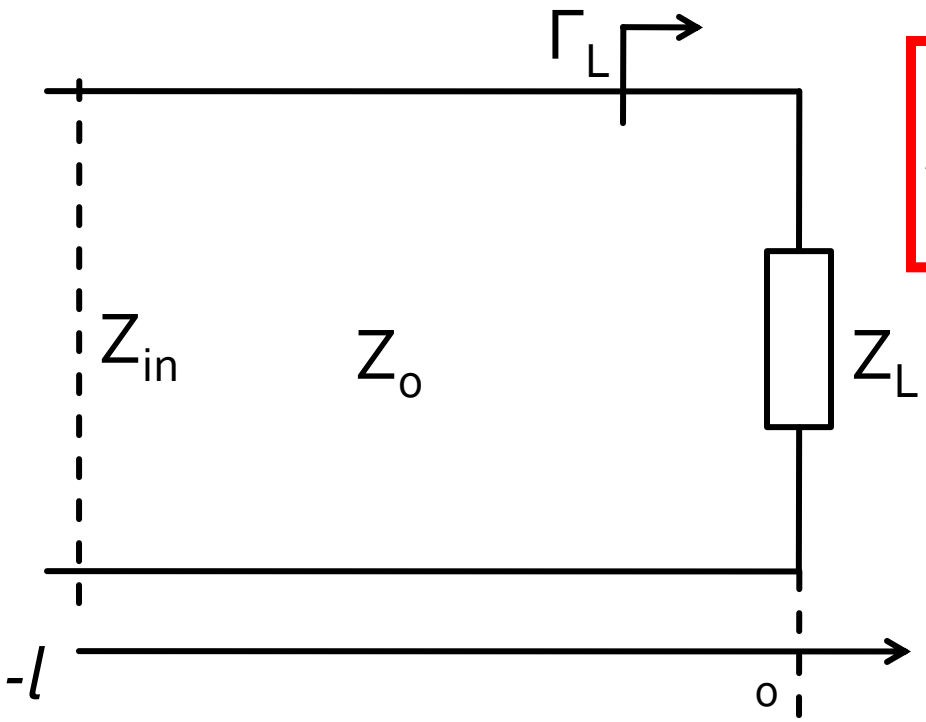

$$Z_{in} = Z_0 \cdot \frac{Z_L + j \cdot Z_0 \cdot \tan \beta \cdot l}{Z_0 + j \cdot Z_L \cdot \tan \beta \cdot l}$$

Cuprins

- Linii de transmisie
- Adaptarea de impedanța
- Cuploare direcționale
- Divizoare de putere
- Amplificatoare de microunde
- Filtre de microunde
- Oscilatoare de microunde ?

Adaptare dpdv al puterii

$$Z_L = Z_i^*$$

Daca se alege un Zo real

$$\Gamma = \frac{Z - Z_0}{Z + Z_0}$$

$$\Gamma_L = \Gamma_i^*$$

- numere complexe
- in planul complex

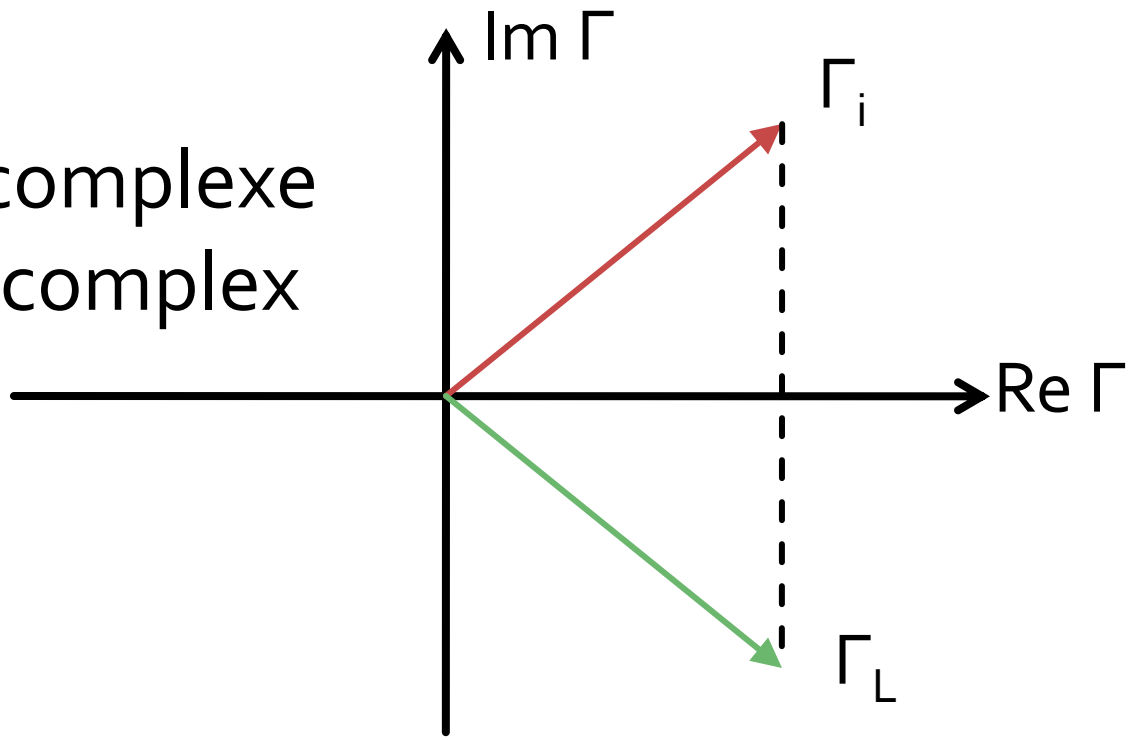

Reflexie de putere / Model

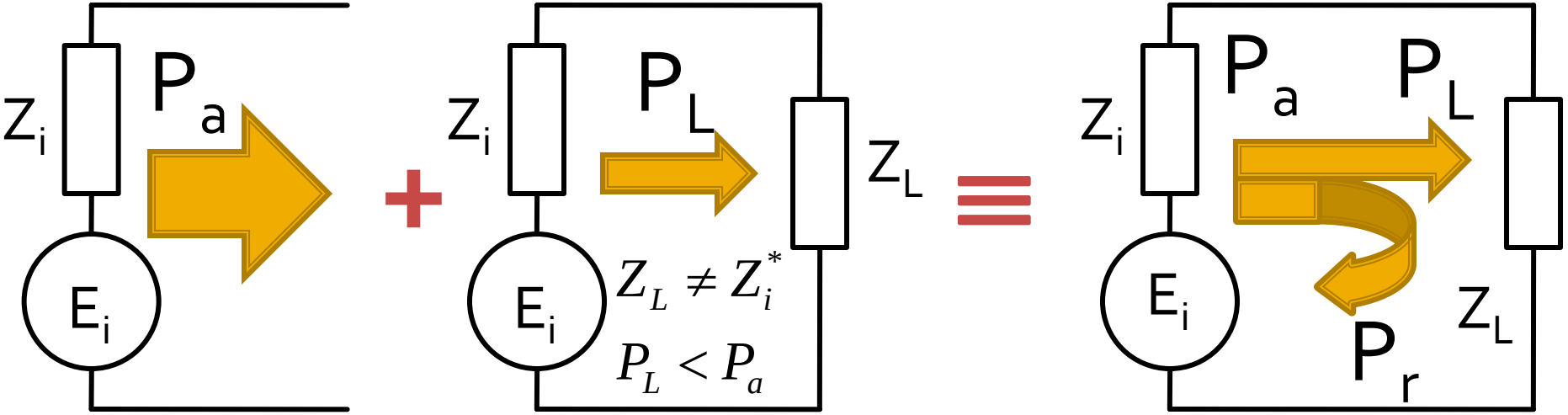

- Generatorul are posibilitatea de a oferi o anumita putere maxima de semnal P_a
- Pentru o sarcina oarecare, acesteia i se ofera o putere de semnal mai mica $P_L < P_a$
- Se intampla **"ca si cum"** (model) o parte din putere se reflecta $P_r = P_a - P_L$
- Puterea este o marime **scalara!**

Reflexie de putere / Model

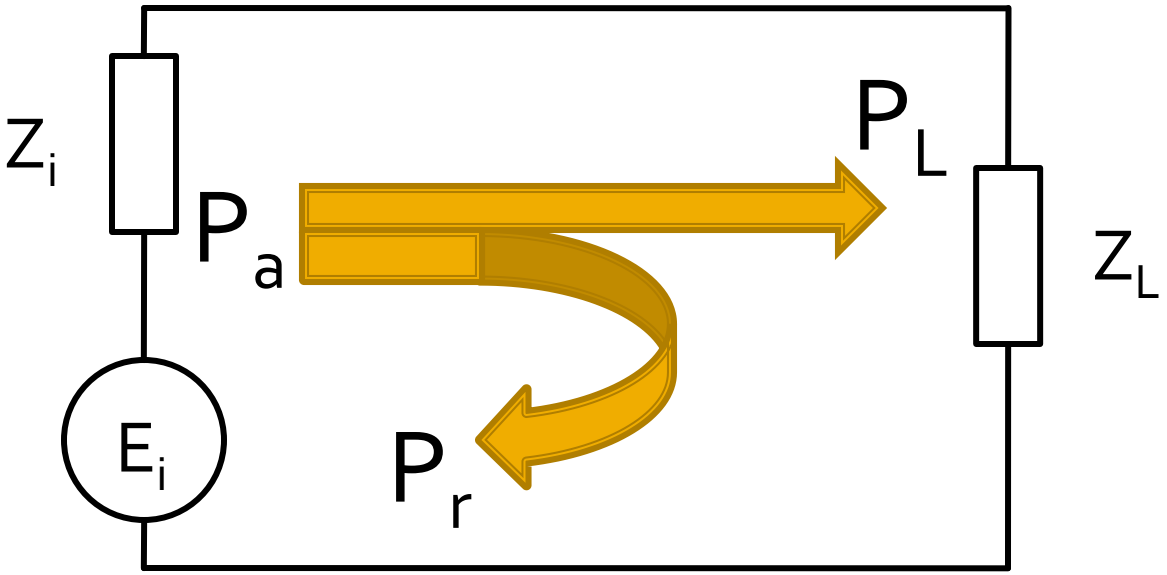

$$P_a = \frac{|E_i|^2}{4R_i}$$

$$P_L = \frac{R_L \cdot |E_i|^2}{(R_i+R_L)^2 + (X_i+X_L)^2}$$

$$P_r = P_a - P_L = \frac{|E_i|^2}{4R_i} - \frac{R_L \cdot |E_i|^2}{(R_i+R_L)^2 + (X_i+X_L)^2} = \frac{|E_i|^2}{4R_i} \cdot \left[1 - \frac{4R_L \cdot R_i}{(R_i+R_L)^2 + (X_i+X_L)^2}\right]$$

$$P_r = \frac{|E_i|^2}{4R_i} \cdot \left[\frac{(R_i-R_L)^2 + (X_i+X_L)^2}{(R_i+R_L)^2 + (X_i+X_L)^2}\right] = P_a \cdot |\Gamma|^2$$

- $|\Gamma|^2$ **este** un coeficient de reflexie in putere

Analiza la nivel de rețea a circuitelor de microunde

Cuprins

- Linii de transmisie
- Adaptarea de impedanța
- Cuploare direcționale
- Divizoare de putere
- Amplificatoare de microunde
- Filtre de microunde
- Oscilatoare de microunde ?

Analiza la nivel de bloc

- are ca scop separarea unui circuit complex in blocuri individuale
- acestea se analizeaza separat (decuplate de restul circuitului) si se caracterizeaza doar prin intermediul porturilor (**cutie neagra**)
- analiza la nivel de retea permite cuplarea rezultatelor individuale si obtinerea unui rezultat total pentru circuit

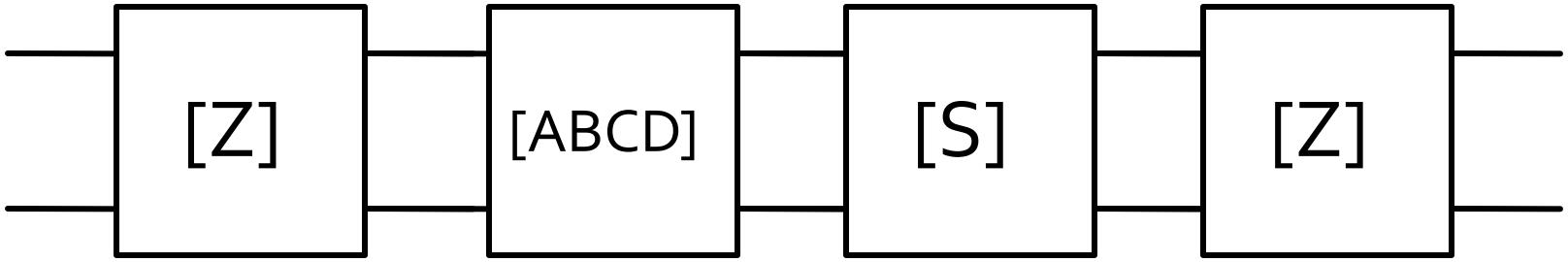

Matricea impedanta

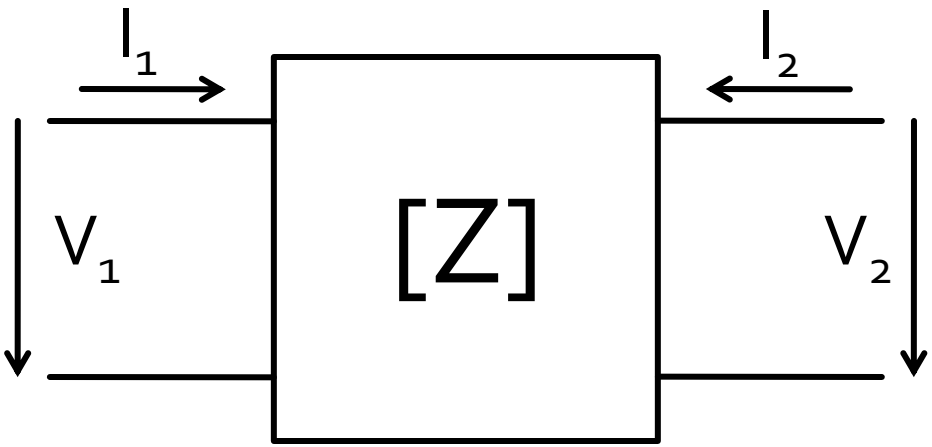

$$\begin{bmatrix} V_1 \\ V_2 \end{bmatrix} = \begin{bmatrix} Z_{11} & Z_{12} \\ Z_{21} & Z_{22} \end{bmatrix} \cdot \begin{bmatrix} I_1 \\ I_2 \end{bmatrix}$$

$$V_1 = Z_{11} \cdot I_1 + Z_{12} \cdot I_2$$

$$V_2 = Z_{21} \cdot I_1 + Z_{22} \cdot I_2$$

$$V_1 = Z_{11} \cdot I_1 \Big|_{I_2=0} \qquad Z_{11} = \frac{V_1}{I_1}\Bigg|_{I_2=0}$$

- Z11 – impedanta de intrare cu iesirea in gol

$$Z_{11} = \frac{V_1}{I_1}\Bigg|_{I_2=0} \qquad Z_{12} = \frac{V_1}{I_2}\Bigg|_{I_1=0} \qquad Z_{21} = \frac{V_2}{I_1}\Bigg|_{I_2=0} \qquad Z_{22} = \frac{V_2}{I_2}\Bigg|_{I_1=0}$$

Matricea admitanta

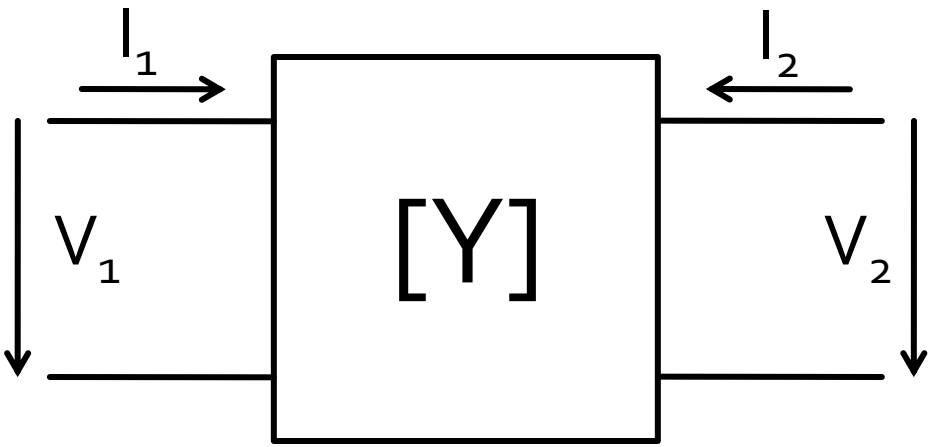

$$\begin{bmatrix} I_1 \\ I_2 \end{bmatrix} = \begin{bmatrix} Y_{11} & Y_{12} \\ Y_{21} & Y_{22} \end{bmatrix} \cdot \begin{bmatrix} V_1 \\ V_2 \end{bmatrix}$$

$$I_1 = Y_{11} \cdot V_1 + Y_{12} \cdot V_2$$

$$I_2 = Y_{21} \cdot V_1 + Y_{22} \cdot V_2$$

$$I_1 = Y_{11} \cdot V_1 \Big|_{V_2=0} \qquad Y_{11} = \frac{I_1}{V_1}\Bigg|_{V_2=0}$$

- Y11 – admitanta de intrare cu iesirea in scurtcircuit

$$Y_{11} = \frac{I_1}{V_1}\Bigg|_{V_2=0} \qquad Y_{12} = \frac{I_1}{V_2}\Bigg|_{V_1=0} \qquad Y_{21} = \frac{I_2}{V_1}\Bigg|_{V_2=0} \qquad Y_{22} = \frac{I_2}{V_2}\Bigg|_{V_1=0}$$

Matrici hibride

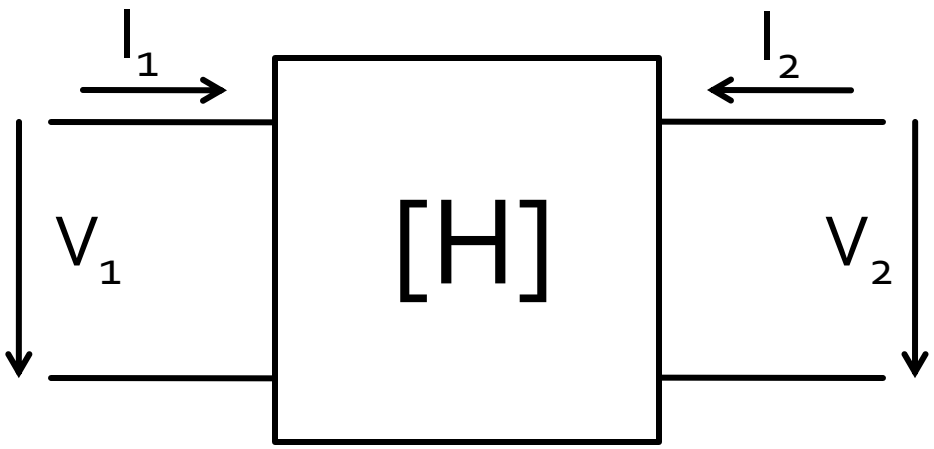

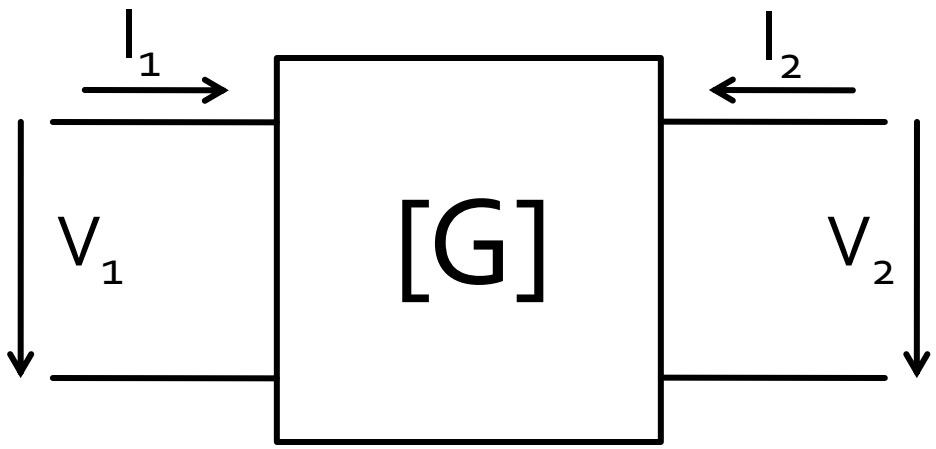

$$\begin{bmatrix} V_1 \\ I_2 \end{bmatrix} = \begin{bmatrix} H_{11} & H_{12} \\ H_{21} & H_{22} \end{bmatrix} \cdot \begin{bmatrix} I_1 \\ V_2 \end{bmatrix}$$

$$\begin{bmatrix} I_1 \\ V_2 \end{bmatrix} = \begin{bmatrix} G_{11} & G_{12} \\ G_{21} & G_{22} \end{bmatrix} \cdot \begin{bmatrix} V_1 \\ I_2 \end{bmatrix}$$

$$H_{21} = \left.\frac{I_2}{I_1}\right|_{V_2=0\, sau\, H_{22}\to\infty}$$

- h_{21E} utilizat la TB, conexiune Emitor comun (β, h_{22} este foarte mare)

Analiza la nivel de bloc

- fiecare matrice este potrivita pentru un anumit mod de excitare a porturilor (V,I)
  - matricea H in conexiune emitor comun pentru TB: I_B, V_{CE}
  - matricile ofera marimile asociate in functie de marimile de "atac"
- traditional parametrii Z,Y,G,H sunt notati cu litera mica (z,y,g,h)
- In microunde se prefera notatia cu litera mare pentru a nu exista confuzie cu parametrii raportati la o valoare de referinta

$$z = \frac{Z}{Z_0} \qquad y = \frac{Y}{Y_0} = \frac{1/Z}{1/Z_0} = \frac{Z_0}{Z} = Z_0 \cdot Y$$

$$z_{11} = \frac{Z_{11}}{Z_0} \qquad y_{11} = \frac{Y_{11}}{Y_0} = Z_0 \cdot Y_{11}$$

Matricea ABCD – de transmisie

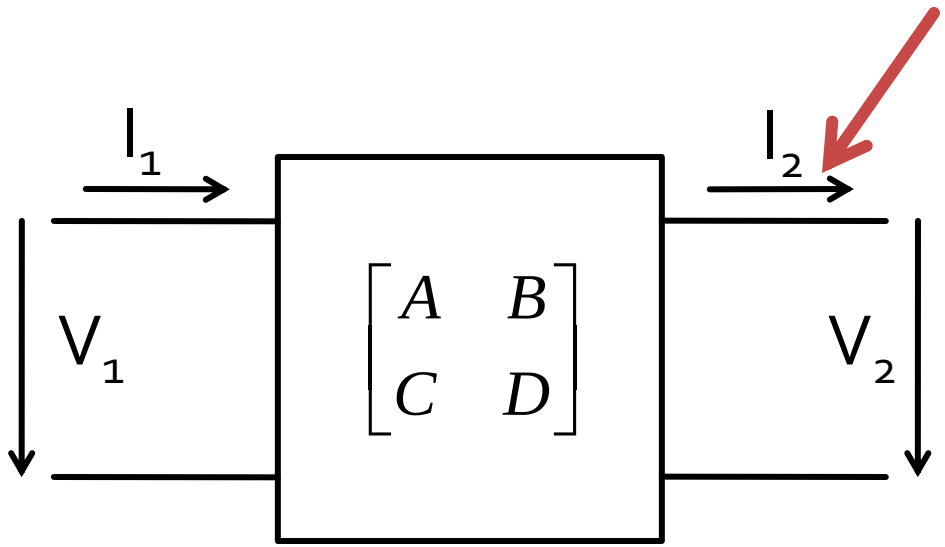

$$\begin{bmatrix} V_1 \\ I_1 \end{bmatrix} = \begin{bmatrix} A & B \\ C & D \end{bmatrix} \cdot \begin{bmatrix} V_2 \\ I_2 \end{bmatrix}$$

$$V_1 = A \cdot V_2 + B \cdot I_2$$

$$I_1 = C \cdot V_2 + D \cdot I_2$$

$$\begin{bmatrix} V_2 \\ I_2 \end{bmatrix} = \frac{1}{A \cdot D - B \cdot C} \cdot \begin{bmatrix} D & -B \\ -C & A \end{bmatrix} \cdot \begin{bmatrix} V_1 \\ I_1 \end{bmatrix}$$

$$A = \left.\frac{V_1}{V_2}\right|_{I_2=0} \qquad B = \left.\frac{V_1}{I_2}\right|_{V_2=0} \qquad C = \left.\frac{I_1}{V_2}\right|_{I_2=0} \qquad D = \left.\frac{I_1}{I_2}\right|_{V_2=0}$$

Matricea ABCD – de transmisie

- introduce o legatura intre "intrare" si "iesire"
- permite inlatuirea usoara intre mai multe blocuri

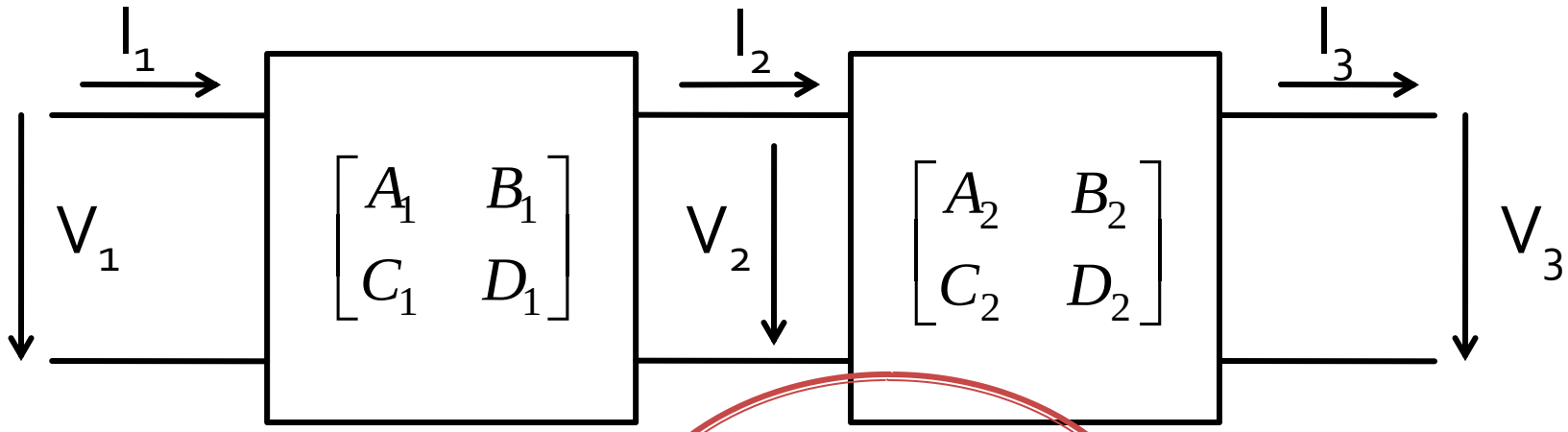

$$\begin{bmatrix} V_1 \\ I_1 \end{bmatrix} = \begin{bmatrix} A_1 & B_1 \\ C_1 & D_1 \end{bmatrix} \cdot \begin{bmatrix} V_2 \\ I_2 \end{bmatrix} = \begin{bmatrix} A_1 & B_1 \\ C_1 & D_1 \end{bmatrix} \cdot \begin{bmatrix} A_2 & B_2 \\ C_2 & D_2 \end{bmatrix} \cdot \begin{bmatrix} V_3 \\ I_3 \end{bmatrix}$$

Matricea ABCD – de transmisie

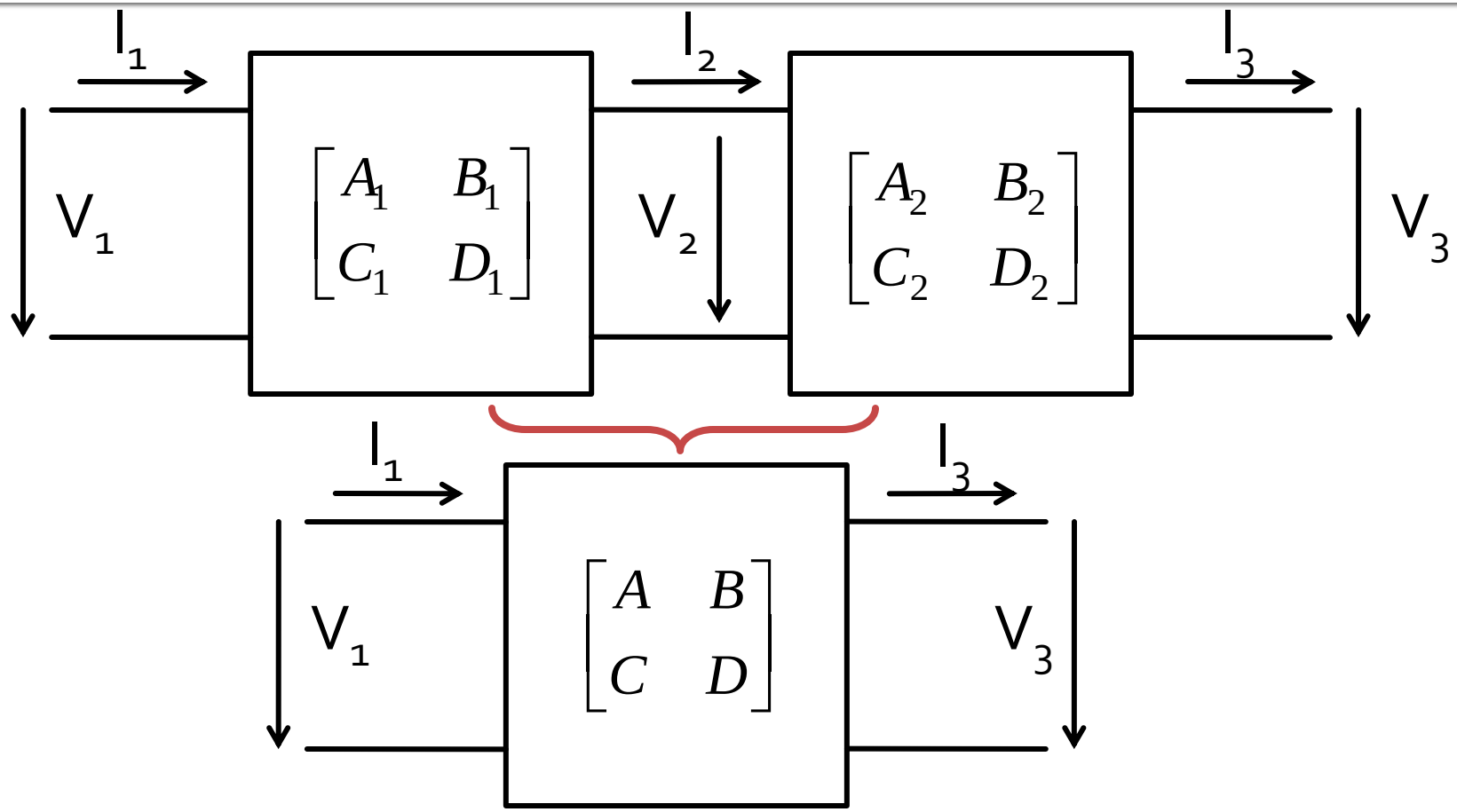

$$\begin{bmatrix} A & B \\ C & D \end{bmatrix} = \begin{bmatrix} A_1 & B_1 \\ C_1 & D_1 \end{bmatrix} \cdot \begin{bmatrix} A_2 & B_2 \\ C_2 & D_2 \end{bmatrix}$$

Matricea ABCD – de transmisie

- potrivita **numai** pentru diporti (Z,Y pot fi usor extinse pentru multiporti/n-porturi)
- permite cuplarea facila a mai multor elemente
- permite calculul unor circuite complexe cu o intrare si o iesire prin spargerea in blocuri individuale componente
- se pot crea "biblioteci" de matrici pentru blocuri mai des utilizate

Matrici ABCD

- Impedanta serie

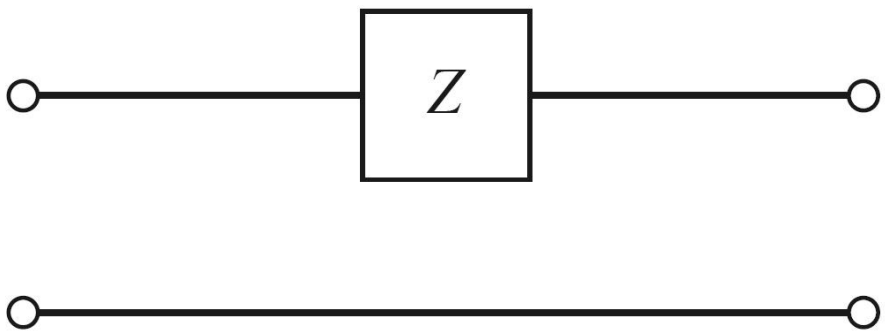

$$A = 1 \qquad B = Z$$

$$C = 0 \qquad D = 1$$

$$\begin{bmatrix} 1 & Z \\ 0 & 1 \end{bmatrix}$$

$$A = \left.\frac{V_1}{V_2}\right|_{I_2=0} = 1 \qquad B = \left.\frac{V_1}{I_2}\right|_{V_2=0} = \frac{V_1}{V_1/Z} = Z$$

$$C = \left.\frac{I_1}{V_2}\right|_{I_2=0} = 0 \qquad D = \left.\frac{I_1}{I_2}\right|_{V_2=0} = \frac{I_1}{I_1} = 1$$

Matrici ABCD

- Admitanta paralel

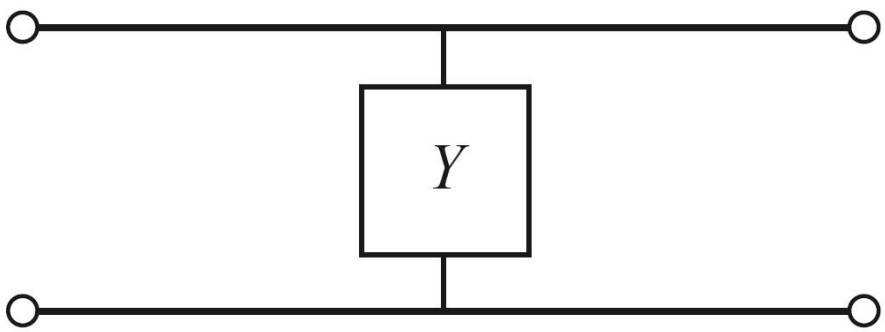

$$A = 1 \qquad B = 0$$

$$C = Y \qquad D = 1$$

$$\begin{bmatrix} 1 & 0 \\ Y & 1 \end{bmatrix}$$

Verificare - tema!

Matrici ABCD

- Sectiune de linie de transmisie

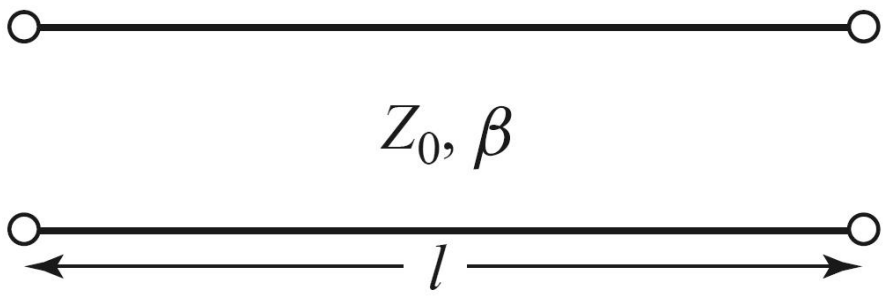

$$A = \cos\beta \cdot l$$

$$B = j \cdot Z_0 \cdot \sin\beta \cdot l$$

$$C = j \cdot Y_0 \cdot \sin\beta \cdot l$$

$$D = \cos\beta \cdot l$$

$$\begin{bmatrix} \cos\beta \cdot l & j \cdot Z_0 \cdot \sin\beta \cdot l \\ j \cdot Y_0 \cdot \sin\beta \cdot l & \cos\beta \cdot l \end{bmatrix}$$

Verificare - tema!

$$Z_{in} = Z_0 \cdot \frac{Z_L + j \cdot Z_0 \cdot \tan\beta \cdot l}{Z_0 + j \cdot Z_L \cdot \tan\beta \cdot l}$$

Matrici ABCD

- Transformator

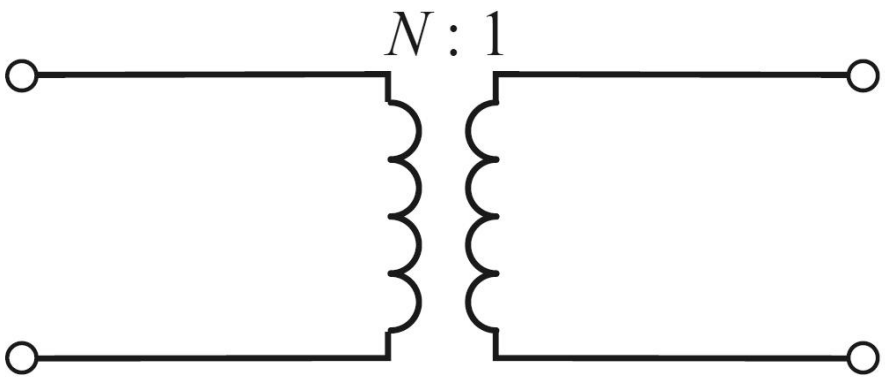

$$A = N \qquad B = 0$$

$$C = 0 \qquad D = \frac{1}{N}$$

$$\begin{bmatrix} N & 0 \\ 0 & \frac{1}{N} \end{bmatrix}$$

Verificare - tema!

Matrici ABCD

- diport π

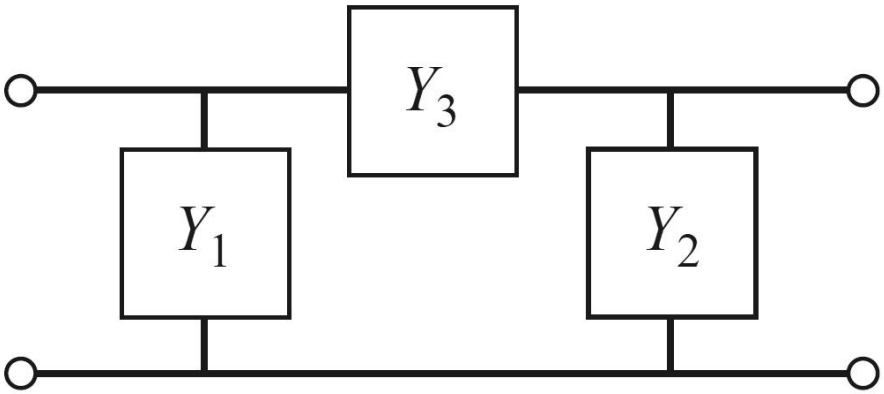

$$A = 1 + \frac{Y_2}{Y_3}$$

$$B = \frac{1}{Y_3}$$

$$C = Y_1 + Y_2 + \frac{Y_1 \cdot Y_2}{Y_3}$$

$$D = 1 + \frac{Y_1}{Y_3}$$

Verificare - tema!

Matrici ABCD

- diport T

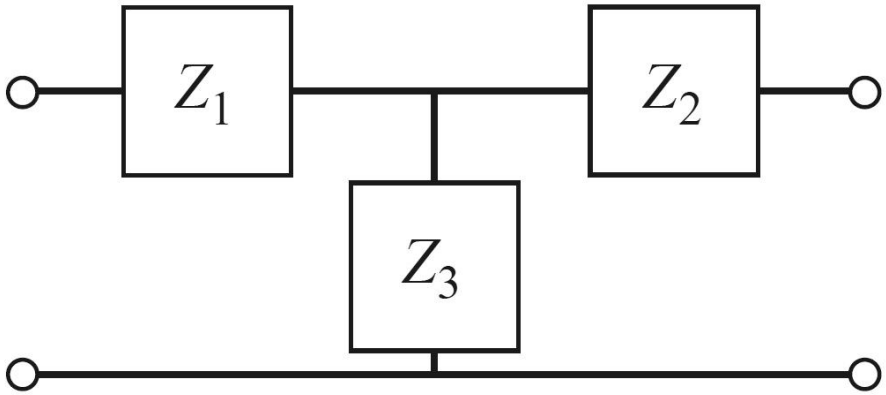

$$A = 1 + \frac{Z_1}{Z_3}$$

$$B = Z_1 + Z_2 + \frac{Z_1 \cdot Z_2}{Z_3}$$

$$C = \frac{1}{Z_3}$$

$$D = 1 + \frac{Z_2}{Z_3}$$

Verificare - tema!

Exemplu utilizare matrice ABCD

- Determinati tensiunea pe sarcina in circuitul urmator

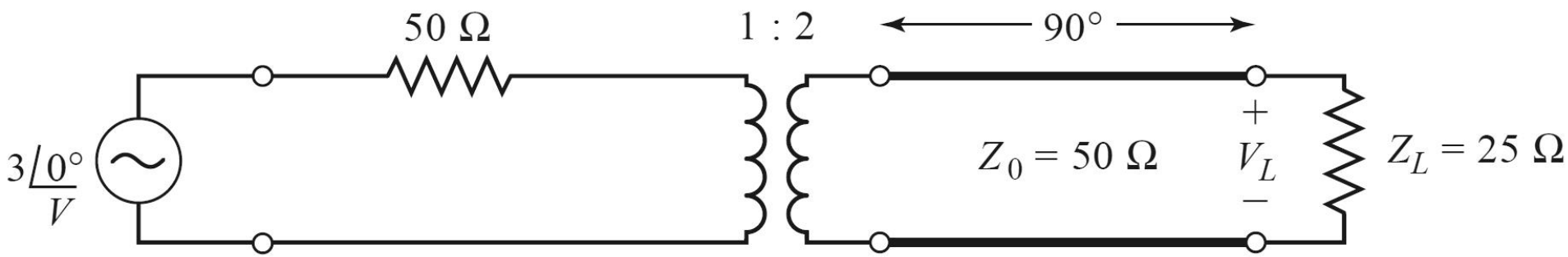

Exemplu utilizare matrice ABCD

- Sectionare circuit in elemente simple
- Generatoarele raman in exterior
- Daca e necesar, se creaza porturi de intrare si iesire lasate in gol

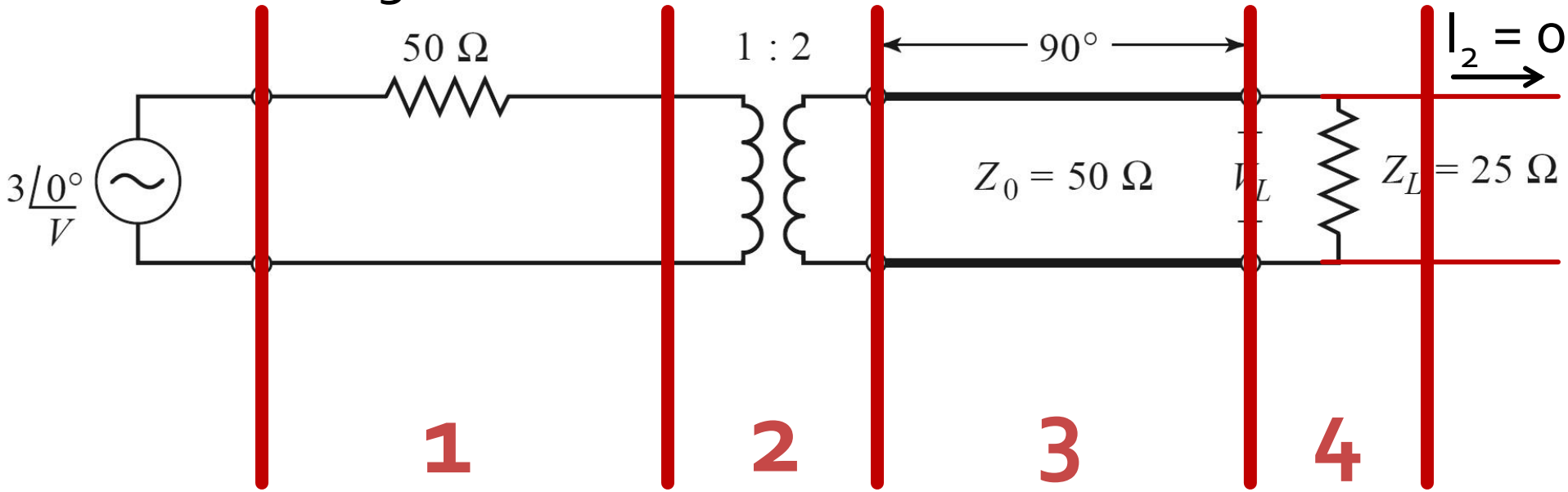

$$\begin{bmatrix} A & B \\ C & D \end{bmatrix} = M_1 \cdot M_2 \cdot M_3 \cdot M_4 \qquad V_1 = A \cdot V_2 + B \cdot I_2\big|_{I_2=0} \qquad V = A \cdot V_L \rightarrow V_L = \frac{V}{A}$$

Exemplu utilizare matrice ABCD

- M_1 , impedanta serie

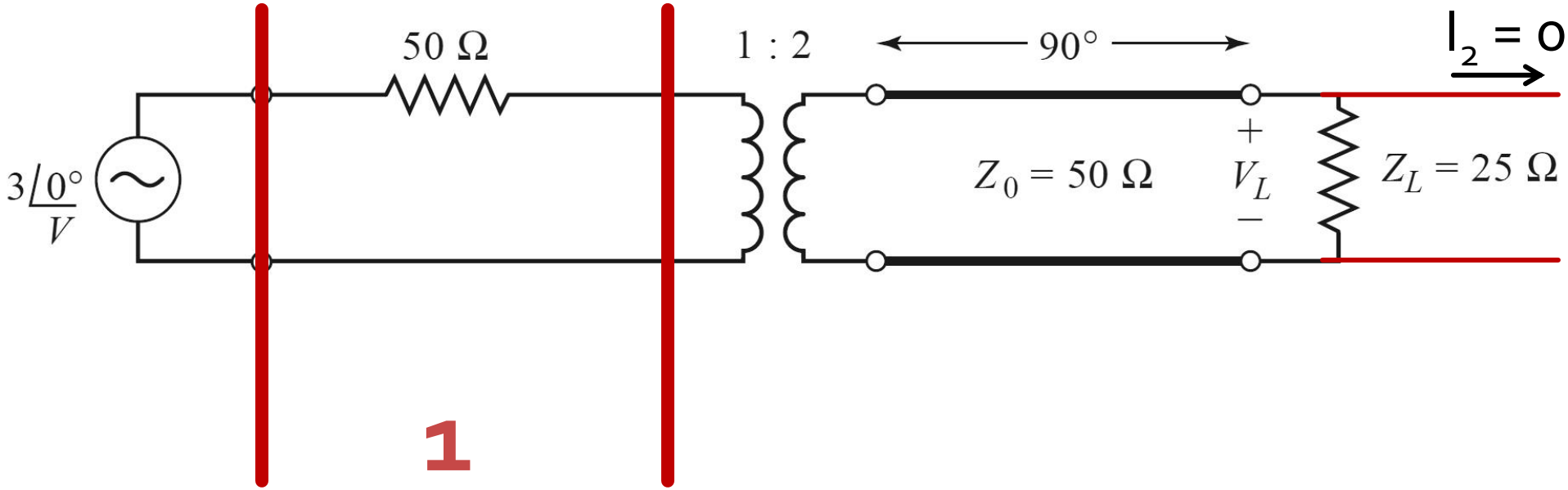

$$M_1 = \begin{bmatrix} A & B \\ C & D \end{bmatrix} = \begin{bmatrix} 1 & 50 \\ 0 & 1 \end{bmatrix}$$

Exemplu utilizare matrice ABCD

- M_2 , transformator 1:2

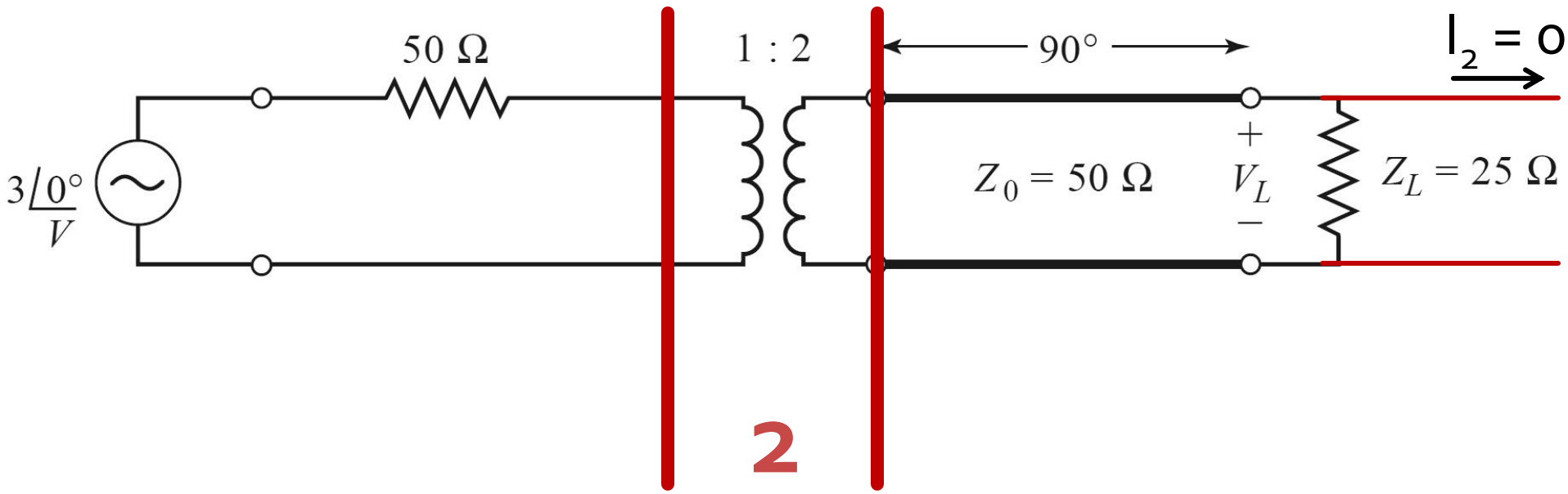

$$M_2 = \begin{bmatrix} A & B \\ C & D \end{bmatrix} = \begin{bmatrix} 1/2 & 0 \\ 0 & 2 \end{bmatrix}$$

Exemplu utilizare matrice ABCD

- M_3 , linie serie, E = 90°

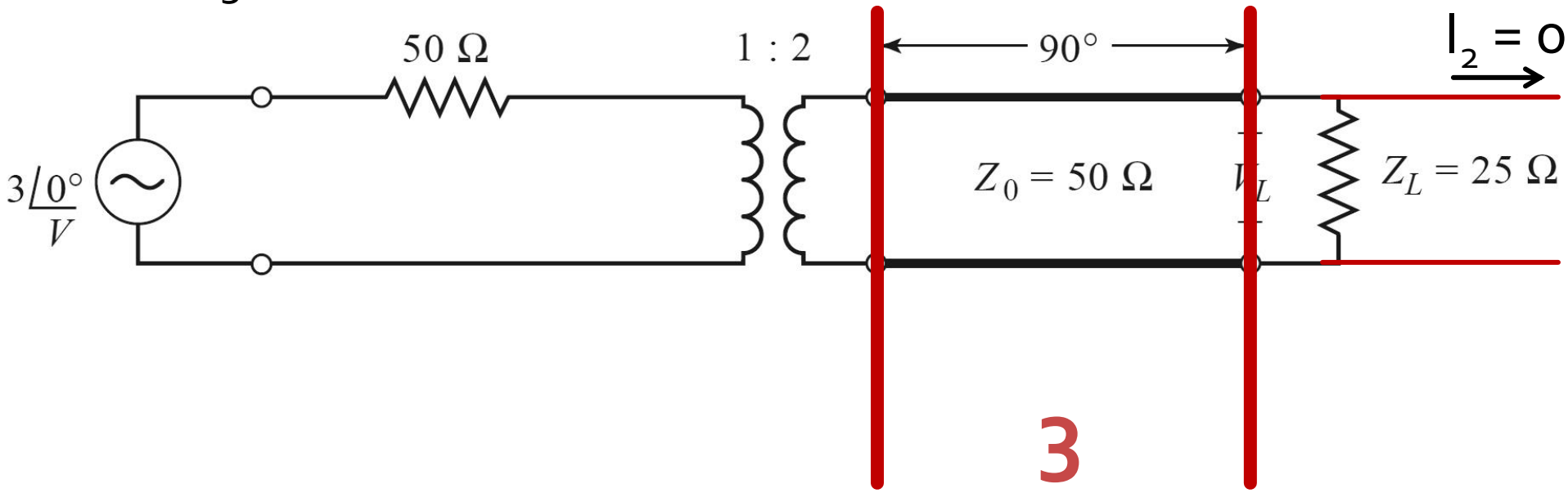

$$M_3 = \begin{bmatrix} A & B \\ C & D \end{bmatrix} = \begin{bmatrix} 0 & 50 \cdot j \\ \frac{j}{50} & 0 \end{bmatrix}$$

Exemplu utilizare matrice ABCD

- M_4 , impedanta/admitanta paralel

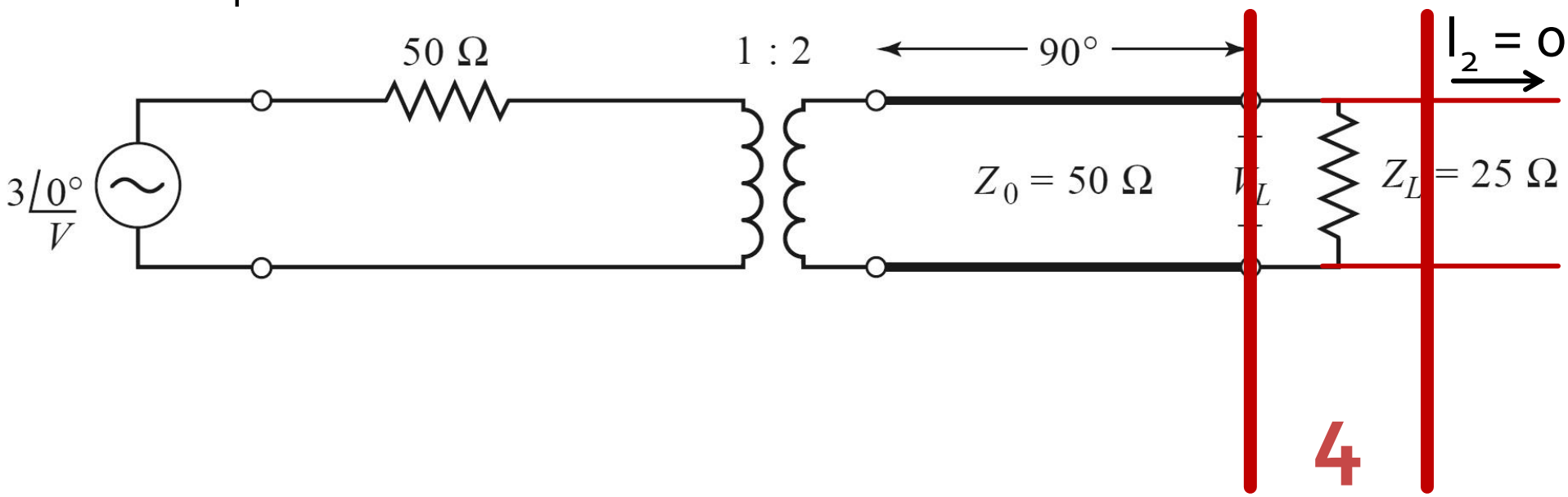

$$M_4 = \begin{bmatrix} A & B \\ C & D \end{bmatrix} = \begin{bmatrix} 1 & 0 \\ \frac{1}{25} & 1 \end{bmatrix}$$

Exemplu utilizare matrice ABCD

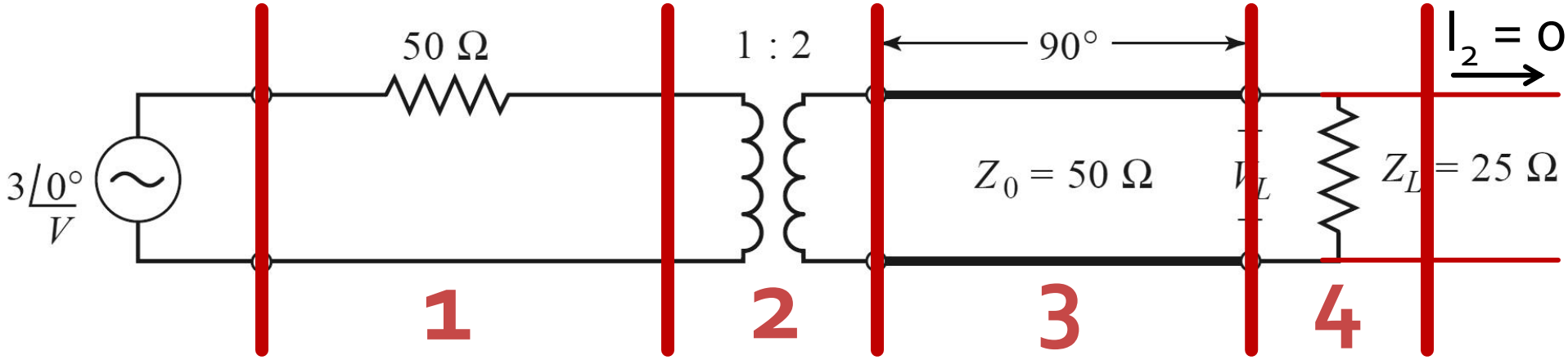

$$\begin{bmatrix} A & B \\ C & D \end{bmatrix} = \begin{bmatrix} 1 & 50 \\ 0 & 1 \end{bmatrix} \cdot \begin{bmatrix} \frac{1}{2} & 0 \\ 0 & 2 \end{bmatrix} \cdot \begin{bmatrix} 0 & 50 \cdot j \\ \frac{j}{50} & 0 \end{bmatrix} \cdot \begin{bmatrix} 1 & 0 \\ \frac{1}{25} & 1 \end{bmatrix} = \begin{bmatrix} 3 \cdot j & 25 \cdot j \\ \frac{j}{25} & 0 \end{bmatrix}$$

$$V_L = \frac{V}{A} = \frac{3\angle 0°}{3 \cdot j} = 1\angle -90°$$

Biblioteci de matrici ABCD

TABLE 4.1 *ABCD* **Parameters of Some Useful Two-Port Circuits**

Circuit	*ABCD* Parameters	
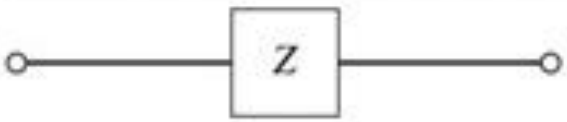	$A = 1$ $C = 0$	$B = Z$ $D = 1$
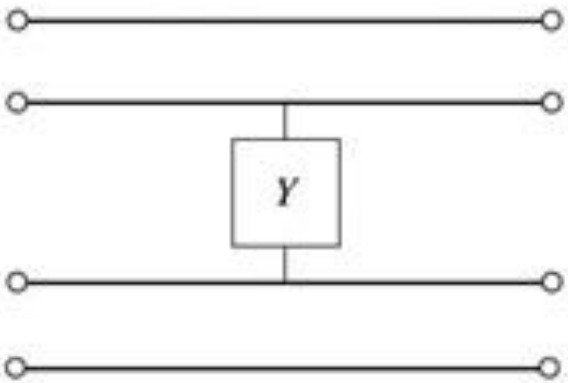	$A = 1$ $C = Y$	$B = 0$ $D = 1$
	$A = \cos \beta\ell$ $C = jY_0 \sin \beta\ell$	$B = jZ_0 \sin \beta\ell$ $D = \cos \beta\ell$

Biblioteci de matrici ABCD

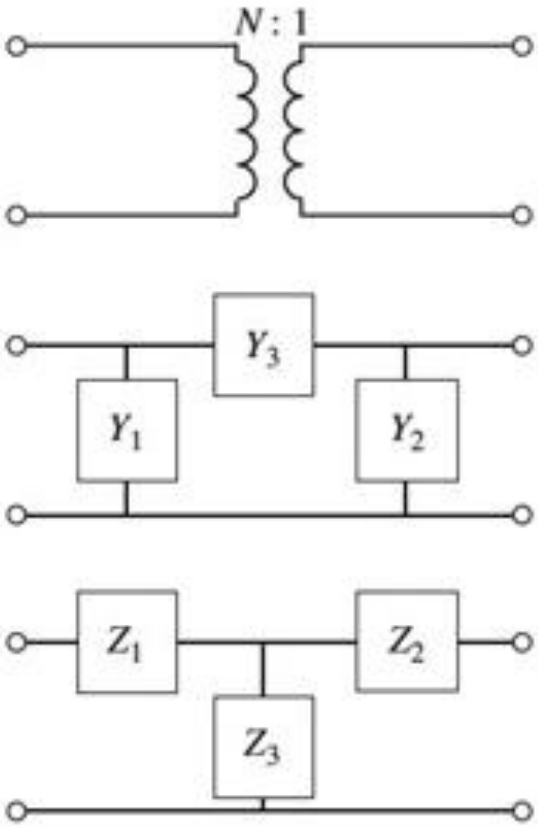

$$A = N \qquad B = 0$$
$$C = 0 \qquad D = \frac{1}{N}$$

$$A = 1 + \frac{Y_2}{Y_3} \qquad B = \frac{1}{Y_3}$$
$$C = Y_1 + Y_2 + \frac{Y_1 Y_2}{Y_3} \qquad D = 1 + \frac{Y_1}{Y_3}$$

$$A = 1 + \frac{Z_1}{Z_3} \qquad B = Z_1 + Z_2 + \frac{Z_1 Z_2}{Z_3}$$
$$C = \frac{1}{Z_3} \qquad D = 1 + \frac{Z_2}{Z_3}$$

Table 4.1

Continuare

Analiza la nivel de rețea a circuitelor de microunde

Matricea S (repartitie)

- Scattering parameters

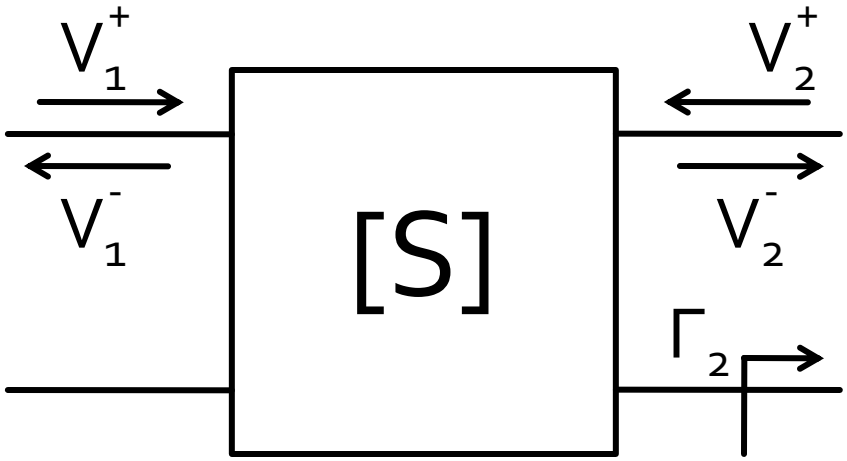

$$\begin{bmatrix} V_1^- \\ V_2^- \end{bmatrix} = \begin{bmatrix} S_{11} & S_{12} \\ S_{21} & S_{22} \end{bmatrix} \cdot \begin{bmatrix} V_1^+ \\ V_2^+ \end{bmatrix}$$

$$S_{11} = \left.\frac{V_1^-}{V_1^+}\right|_{V_2^+=0} \qquad S_{21} = \left.\frac{V_2^-}{V_1^+}\right|_{V_2^+=0}$$

- $V_2^+ = 0$ are semnificatia: la portul 2 este conectata impedanta care realizeaza conditia de adaptare (complex conjugat)

$$\Gamma_2 = 0 \rightarrow V_2^+ = 0$$

Matricea S (repartitie)

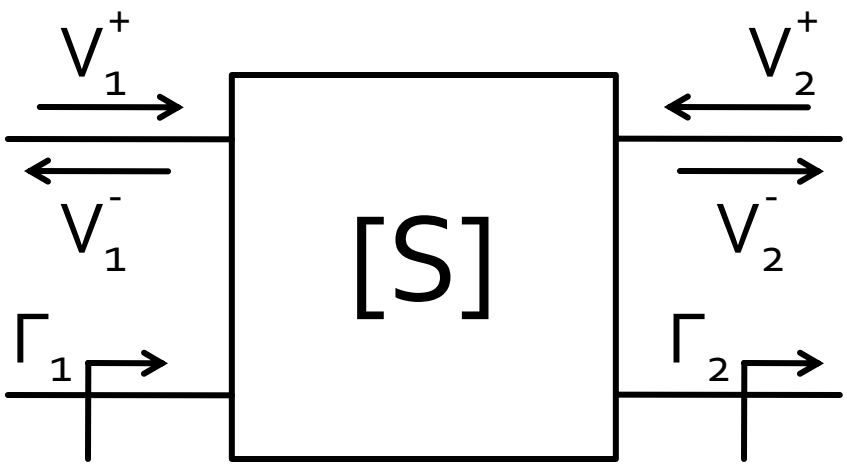

$$\begin{bmatrix} V_1^- \\ V_2^- \end{bmatrix} = \begin{bmatrix} S_{11} & S_{12} \\ S_{21} & S_{22} \end{bmatrix} \cdot \begin{bmatrix} V_1^+ \\ V_2^+ \end{bmatrix}$$

$$S_{11} = \left.\frac{V_1^-}{V_1^+}\right|_{V_2^+=0} = \Gamma_1\big|_{\Gamma_2=0}$$

$$S_{21} = \left.\frac{V_2^-}{V_1^+}\right|_{V_2^+=0} = T_{21}\big|_{\Gamma_2=0}$$

- S11 este coeficientul de reflexie la portul ***1*** cand cand portul ***2*** este terminat pe impedanta care realizeaza adaptarea
- S21 este coeficientul de transmisie de la portul ***1*** (**al doilea** indice**!**) la portul ***2*** (**primul** indice**!**) cand se depune semnal la portul ***1*** portul ***2*** este terminat pe impedanta care realizeaza adaptarea

Matricea S (repartitie)

- Matricea S poate fi extinsa (generalizata) pentru multiporti (n-porturi)

$$S_{ii} = \left.\frac{V_i^-}{V_i^+}\right|_{V_k^+=0,\forall k\neq i} \qquad S_{ij} = \left.\frac{V_i^-}{V_j^+}\right|_{V_k^+=0,\forall k\neq j}$$

- S_{ii} este coeficientul de reflexie la portul ***i*** cand toate celelalte porturi sunt conectate la impedanta care realizeaza adaptarea
- S_{ij} este coeficientul de transmisie de la portul ***j*** (**al doilea** indice**!**) la portul ***i*** (**primul** indice**!**) cand se depune semnal la portul ***j*** si toate celelalte porturi sunt conectate la impedanta care realizeaza adaptarea

Proprietati [S]

- Daca portul i este conectat la o linie cu impedanta caracteristica Z_{oi}
- Curs 3

$$V(z)=V_0^+ e^{-j\cdot\beta\cdot z}+V_0^- e^{j\cdot\beta\cdot z} \qquad I(z)=\frac{V_0^+}{Z_0}e^{-j\cdot\beta\cdot z}-\frac{V_0^-}{Z_0}e^{j\cdot\beta\cdot z}$$

In planul de referinta al portului, z=o

$$V_i=V_i^+ + V_i^- \qquad I_i=\frac{V_i^+}{Z_{0i}}-\frac{V_i^-}{Z_{0i}} \qquad [Z_0]=\begin{bmatrix} Z_{01} & \cdots & 0 \\ \vdots & \ddots & \vdots \\ 0 & \cdots & Z_{0n} \end{bmatrix}$$

- Legatura cu matricea Z $\quad [Z]\cdot[I]=[V]$

$$[Z]\cdot[I]=[Z_0]^{-1}\cdot[Z]\cdot[V^+]-[Z_0]^{-1}\cdot[Z]\cdot[V^-] \qquad [V]=[V^+]+[V^-]$$

$$[Z_0]^{-1}\cdot[Z]\cdot[V^+]-[Z_0]^{-1}\cdot[Z]\cdot[V^-]=[V^+]+[V^-] \qquad ([Z]-[Z_0])\cdot[V^+]=([Z]+[Z_0])\cdot[V^-]$$

$$[V^-]=[S]\cdot[V^+] \qquad \boxed{[S]=([Z]-[Z_0])\cdot([Z]+[Z_0])^{-1}}$$

Deplasare a planului de referinta

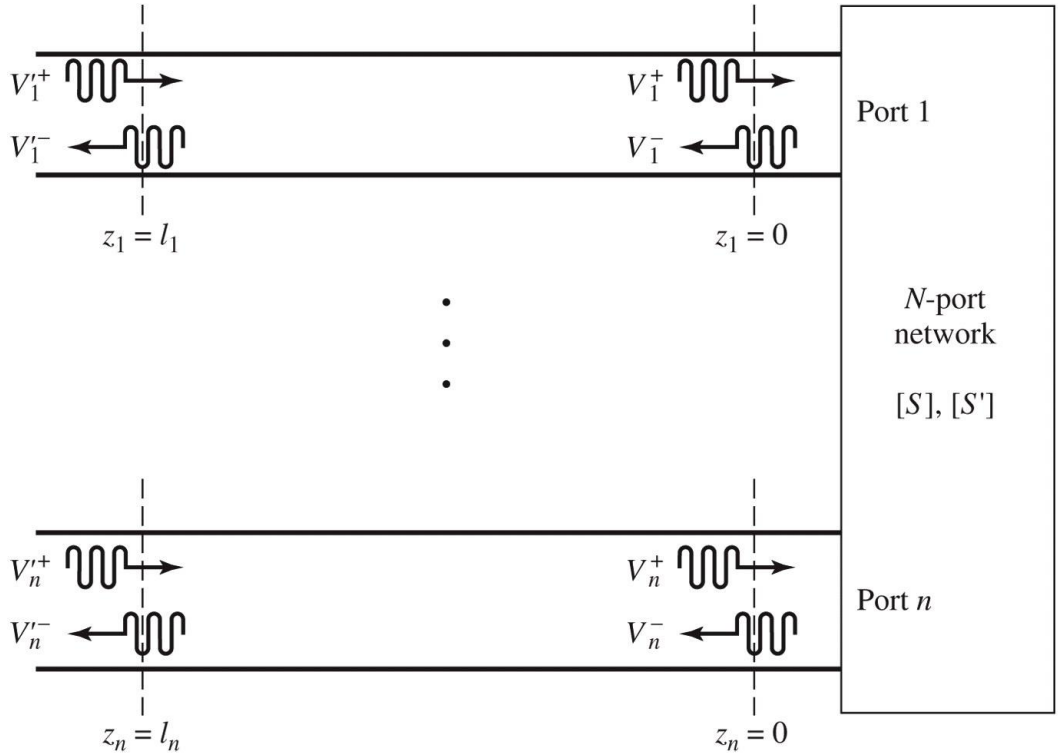

Figure 4.9

$$[S'] = \begin{bmatrix} e^{-j\cdot\theta_1} & 0 & \cdots & 0 \\ 0 & e^{-j\cdot\theta_2} & 0 & 0 \\ \vdots & \vdots & \ddots & \vdots \\ 0 & \cdots & \cdots & e^{-j\cdot\theta_N} \end{bmatrix} \cdot [S] \cdot \begin{bmatrix} e^{-j\cdot\theta_1} & 0 & \cdots & 0 \\ 0 & e^{-j\cdot\theta_2} & 0 & 0 \\ \vdots & \vdots & \ddots & \vdots \\ 0 & \cdots & \cdots & e^{-j\cdot\theta_N} \end{bmatrix}$$

Proprietati [S]

- Circuite reciproce (fara circuite active, ferite)

$$Z_{ij} = Z_{ji}, \forall j \neq i$$

$$Y_{ij} = Y_{ji}, \forall j \neq i$$

$$S_{ij} = S_{ji}, \forall j \neq i \qquad [S] = [S]^t$$

- Circuite fara pierderi

$$\mathrm{Re}\{Z_{ij}\} = 0, \forall i, j$$

$$\mathrm{Re}\{Y_{ij}\} = 0, \forall i, j$$

$$\sum_{k=1}^{N} S_{ki} \cdot S_{kj}^* = \delta_{ij}, \forall i, j$$

$$[S]^* \cdot [S]^t = [1]$$

$$\sum_{k=1}^{N} S_{ki} \cdot S_{ki}^* = 1$$

$$\sum_{k=1}^{N} S_{ki} \cdot S_{kj}^* = 0, \forall i \neq j$$

Matricea S generalizata

- Amplitudinile totale ale tensiunii si curentului in functie de amplitudinile undelor incidenta si reflectate pentru o linie

$$V = V_0^+ + V_0^- \qquad I = \frac{1}{Z_0} \cdot \left(V_0^+ - V_0^-\right)$$

planul de referinta al portului, z=o

- Aflam amplitudinile undelor de tensiune

$$V_0^+ = \frac{V + Z_0 \cdot I}{2} \qquad V_0^- = \frac{V - Z_0 \cdot I}{2}$$

- Puterea oferita sarcinii la iesirea din linie:

$$P_L = \frac{1}{2} \cdot \mathrm{Re}\left\{V \cdot I^*\right\} = \frac{1}{2 \cdot Z_0} \cdot \mathrm{Re}\left\{\left|V_0^+\right|^2 - \underbrace{V_0^+ \cdot V_0^{-*} + V_0^{+*}}_{\left(z - z^*\right) = \mathrm{Im}} \cdot V_0^- - \left|V_0^-\right|^2\right\}$$

$$P_L = \frac{1}{2 \cdot Z_0} \cdot \left(\left|V_0^+\right|^2 - \left|V_0^-\right|^2\right)$$

Matricea S generalizata

- Puterea oferita sarcinii la iesirea din linie:

$$P_L = \frac{1}{2 \cdot Z_0} \cdot \left(\left| V_0^+ \right|^2 - \left| V_0^- \right|^2 \right)$$

- Restrictii
  - Rezultat valid pentru Zo real
  - Necesita prezenta unei linii cu impedanta caracteristica Zo intre generator si sarcina

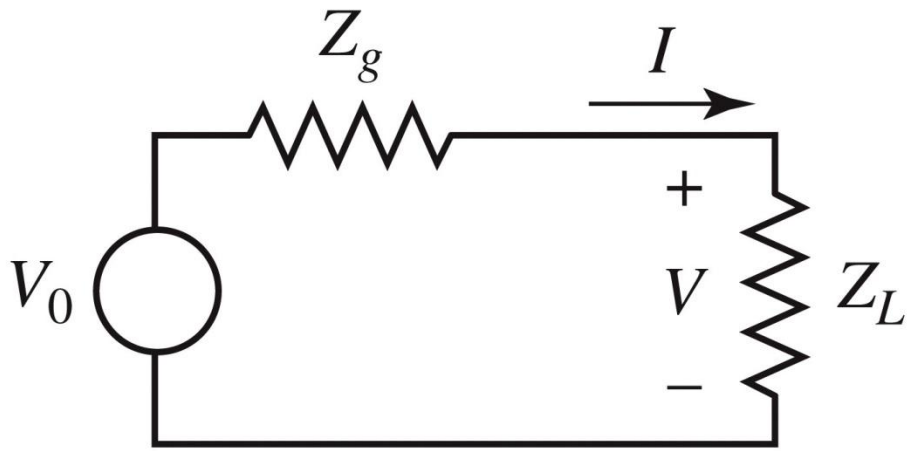

Figure 4.10

Matricea S generalizata

- Definim undele de putere

$$a = \frac{V + Z_R \cdot I}{2 \cdot \sqrt{R_R}}$$ unda incidenta de putere

$$b = \frac{V - Z_R^* \cdot I}{2 \cdot \sqrt{R_R}}$$ unda reflectata de putere

$$Z_R = R_R + j \cdot X_R$$

O impedanta de referinta oarecare, complexa

- Tensiuni si curenti

$$V = \frac{Z_R^* \cdot a + Z_R \cdot b}{\sqrt{R_R}}$$

$$I = \frac{a - b}{\sqrt{R_R}}$$

Reflexie de putere / Model / C4

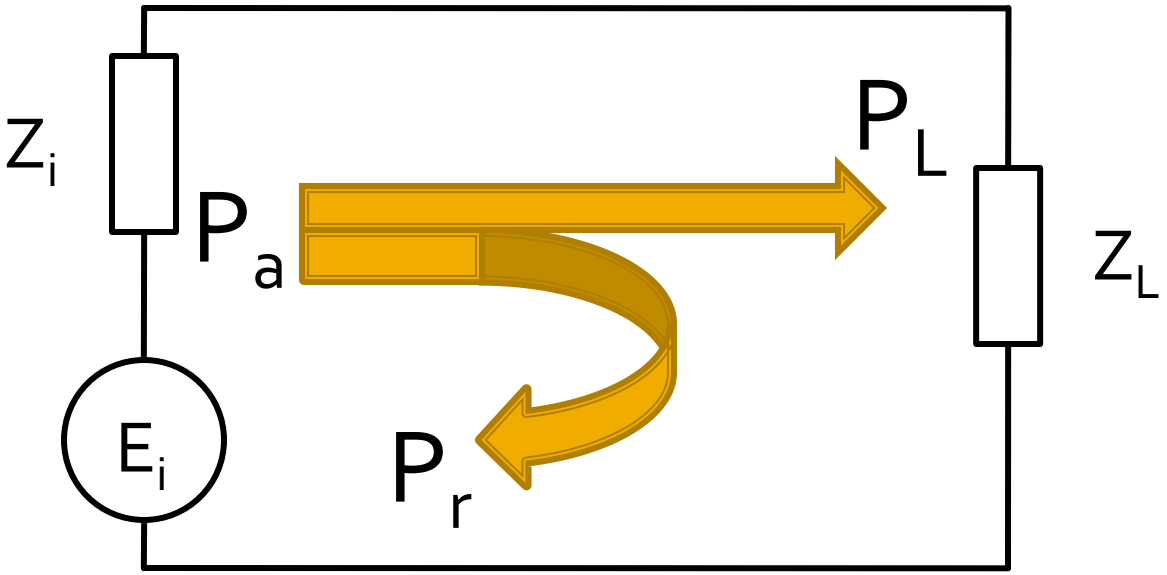

$$P_a = \frac{|E_i|^2}{4R_i}$$

$$P_L = \frac{R_L \cdot |E_i|^2}{(R_i + R_L)^2 + (X_i + X_L)^2}$$

$$\Gamma_L = \frac{Z_L - Z_0^*}{Z_L + Z_0}$$

$$P_r = \frac{|E_i|^2}{4R_i} \cdot \left[\frac{(R_i - R_L)^2 + (X_i + X_L)^2}{(R_i + R_L)^2 + (X_i + X_L)^2} \right] = P_a \cdot |\Gamma|^2$$

- coeficient de reflexie in putere

Unde de putere

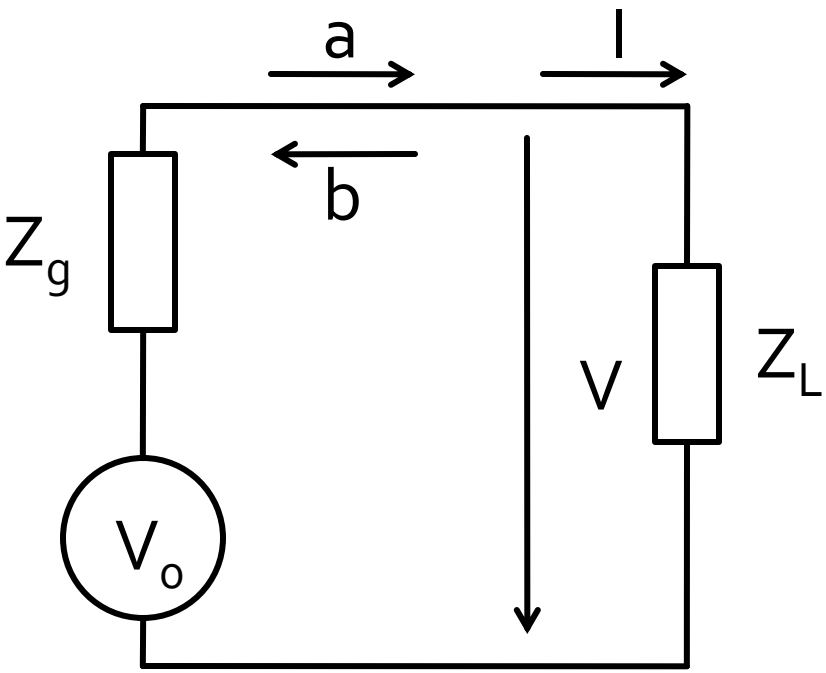

$$P_L = \frac{1}{2} \cdot \mathrm{Re}\left\{V \cdot I^*\right\}$$

$$P_L = \frac{1}{2} \cdot \mathrm{Re}\left\{\frac{Z_R^* \cdot a + Z_R \cdot b}{\sqrt{R_R}} \cdot \left(\frac{a-b}{\sqrt{R_R}}\right)^*\right\}$$

$$P_L = \frac{1}{2R_R} \cdot \mathrm{Re}\left\{Z_R^* \cdot |a|^2 - Z_R^* \cdot a \cdot b^* + Z_R \cdot a^* \cdot b - Z_R \cdot |b|^2\right\}$$

$$\left(z - z^*\right) = \mathrm{Im}$$

$$P_L = \frac{1}{2} \cdot |a|^2 - \frac{1}{2} \cdot |b|^2$$

$$\boxed{\forall Z_R \in C}$$

$$\Gamma_p = \frac{b}{a} = \frac{V - Z_R^* \cdot I}{V + Z_R \cdot I} = \frac{Z_L - Z_R^*}{Z_L + Z_R}$$

Unde de putere

$$V = \frac{V_0 \cdot Z_L}{Z_g + Z_L} \qquad I = \frac{V_0}{Z_g + Z_L} \qquad P_L = \frac{V_0^2}{2} \cdot \frac{R_L}{\left|Z_g + Z_L\right|^2}$$

- Daca aleg $Z_R = Z_L^*$

$$a = \frac{V + Z_R \cdot I}{2 \cdot \sqrt{R_R}} = V_0 \cdot \frac{\dfrac{Z_L}{Z_g + Z_L} + \dfrac{Z_L^*}{Z_g + Z_L}}{2 \cdot \sqrt{R_L}} = V_0 \cdot \frac{\sqrt{R_L}}{Z_g + Z_L}$$

$$b = \frac{V - Z_R^* \cdot I}{2 \cdot \sqrt{R_R}} = V_0 \cdot \frac{\dfrac{Z_L}{Z_g + Z_L} - \dfrac{Z_L}{Z_g + Z_L}}{2 \cdot \sqrt{R_L}} = 0$$

$$P_L = \frac{1}{2} \cdot |a|^2 = \frac{V_0^2}{2} \cdot \frac{R_L}{\left|Z_g + Z_L\right|^2}$$

Unde de putere

- Daca in plus generatorul este adaptat conjugat cu sarcina

$$Z_g = Z_L^* \qquad P_{L\max} = \frac{1}{2}\cdot|a|^2 = \frac{V_0^2}{8\cdot R_L}$$

- Reflexie in putere C4

$$Z_L = Z_i^* \qquad P_{L\max} \equiv P_a \qquad \Gamma = \frac{Z - Z_0^*}{Z + Z_0}$$

$$Z_L \neq Z_i^* \qquad P_r = P_a\cdot|\Gamma|^2 \qquad P_L = P_a - P_r = P_a - P_a\cdot|\Gamma|^2 = P_a\cdot\left(1-|\Gamma|^2\right)$$

- Reflexie in putere C5

$$P_{L\max} \equiv P_a = \frac{1}{2}\cdot|a|^2 \qquad P_L = \frac{1}{2}\cdot|a|^2 - \frac{1}{2}\cdot|b|^2 \qquad \Gamma_p = \frac{b}{a} = \frac{V - Z_R^*\cdot I}{V + Z_R\cdot I} = \frac{Z_L - Z_R^*}{Z_L + Z_R}$$

$$P_L = \frac{1}{2}\cdot|a|^2 - \frac{1}{2}\cdot|a|^2\cdot|\Gamma_p|^2 \qquad P_L = P_a\cdot\left(1-|\Gamma_p|^2\right) \qquad P_r = P_a\cdot|\Gamma_p|^2 = \frac{1}{2}\cdot|b|^2$$

Unde de putere

- Definitii de unde pentru n-porti

$$[Z_R]=\begin{bmatrix} Z_{R1} & \cdots & 0 \\ \vdots & \ddots & \vdots \\ 0 & \cdots & Z_{Rn} \end{bmatrix}$$

$$[F]=\begin{bmatrix} 1/2\sqrt{R_{R1}} & \cdots & 0 \\ \vdots & \ddots & \vdots \\ 0 & \cdots & 1/2\sqrt{R_{Rn}} \end{bmatrix}$$

$$[a]=[F]\cdot([V]+[Z_R]\cdot[I])$$

$$[b]=[F]\cdot\left([V]-[Z_R]^*\cdot[I]\right)$$

$$[Z]\cdot[I]=[V]$$

Unde de putere pentru multiporti

$$[b]=[F]\cdot\left([Z]-[Z_R]^*\right)\cdot\left([Z]+[Z_R]\right)^{-1}\cdot[F]^{-1}\cdot[a]$$

- legatura intre undele de putere incidenta si reflectata

$$[b]=[S_p]\cdot[a]$$

$$[S_p]=[F]\cdot\left([Z]-[Z_R]^*\right)\cdot\left([Z]+[Z_R]\right)^{-1}\cdot[F]^{-1}$$

$$[S]=\left([Z]-[Z_0]\right)\cdot\left([Z]+[Z_0]\right)^{-1}$$

- tipic

$$Z_{0i}=Z_{Ri}=R_0,\forall i$$

$$R_0=50\Omega$$

$$\boxed{[S_p]\equiv[S]}$$

- **coincid!!!**

Matricea S (repartitie)

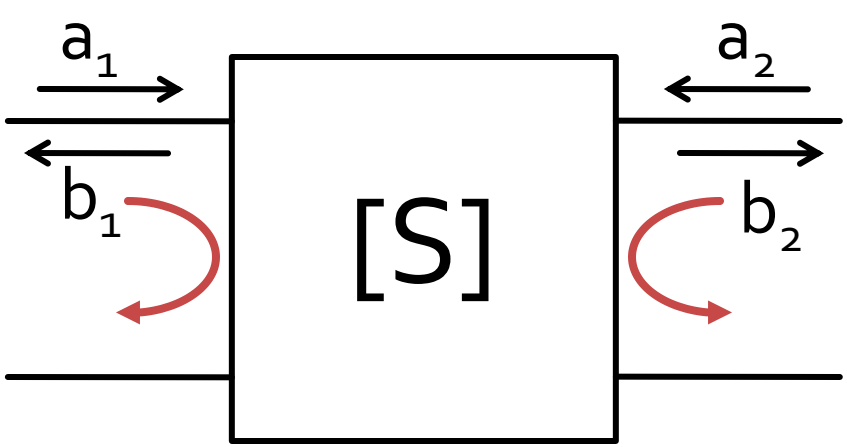

$$\begin{bmatrix} b_1 \\ b_2 \end{bmatrix} = \begin{bmatrix} S_{11} & S_{12} \\ S_{21} & S_{22} \end{bmatrix} \cdot \begin{bmatrix} a_1 \\ a_2 \end{bmatrix}$$

$$S_{11} = \left.\frac{b_1}{a_1}\right|_{a_2=0} \qquad S_{22} = \left.\frac{b_2}{a_2}\right|_{a_1=0}$$

- S_{11} si S_{22} sunt coeficienti de reflexie la intrare si iesire cand celalalt port este adaptat

Matricea S (repartitie)

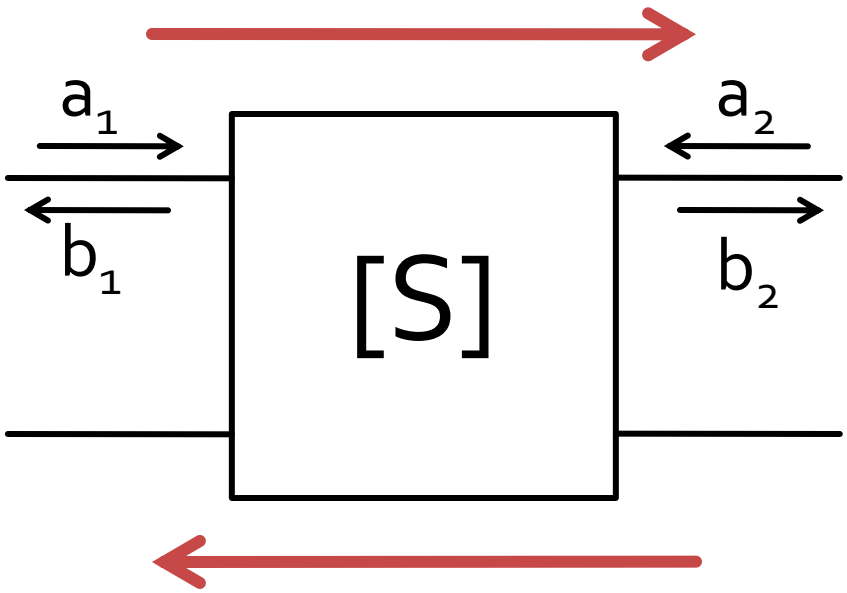

$$\begin{bmatrix} b_1 \\ b_2 \end{bmatrix} = \begin{bmatrix} S_{11} & S_{12} \\ S_{21} & S_{22} \end{bmatrix} \cdot \begin{bmatrix} a_1 \\ a_2 \end{bmatrix}$$

$$S_{21} = \left.\frac{b_2}{a_1}\right|_{a_2=0} \qquad S_{12} = \left.\frac{b_1}{a_2}\right|_{a_1=0}$$

- S_{21} si S_{12} sunt amplificari de semnal cand celalalt port este adaptat

Matricea S (repartitie)

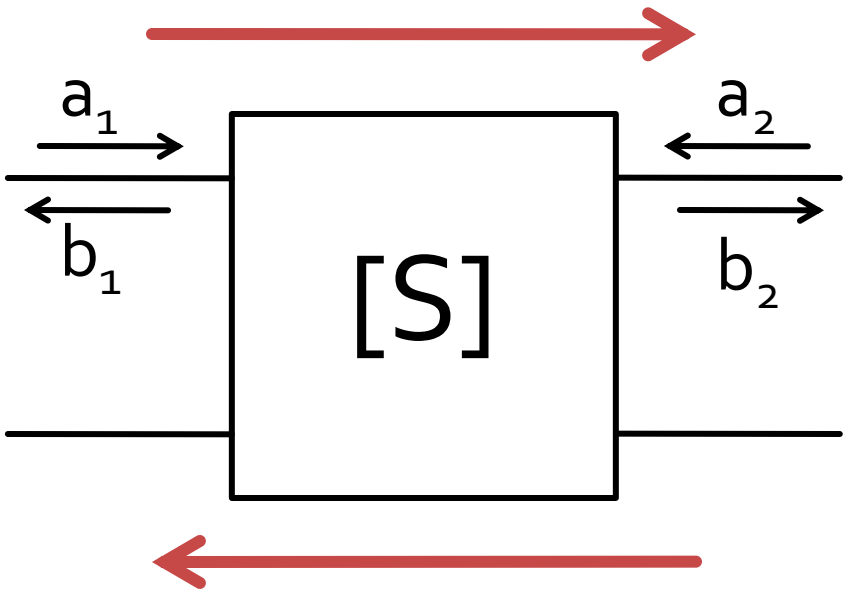

$$\begin{bmatrix} b_1 \\ b_2 \end{bmatrix} = \begin{bmatrix} S_{11} & S_{12} \\ S_{21} & S_{22} \end{bmatrix} \cdot \begin{bmatrix} a_1 \\ a_2 \end{bmatrix}$$

$$|S_{21}|^2 = \frac{Putere\ sarcina\ Z_0}{Putere\ sursa\ Z_0}$$

- a,b
  - informatia despre putere **SI** faza
- S_{ij}
  - influenta circuitului asupra puterii semnalului incluzand informatiile relativ la faza

Masurare S - VNA

- Vector Network Analyzer

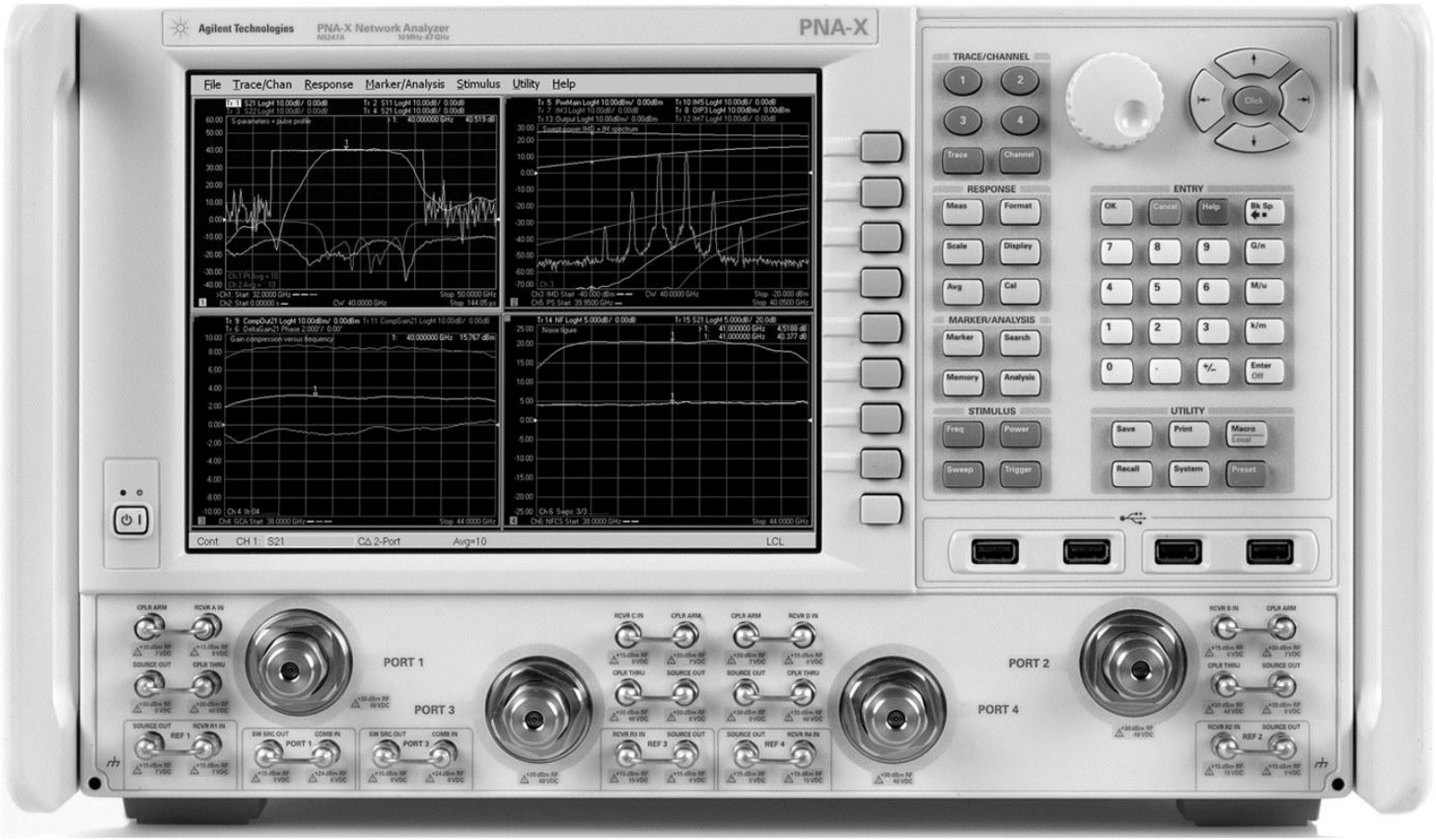

Figure 4.7
Courtesy of Agilent Technologies

Legatura dintre parametrii S si parametrii ABCD

$$A = \sqrt{\frac{Z_{01}}{Z_{02}}}\,\frac{\left(1 + S_{11} - S_{22} - \Delta S\right)}{2S_{21}}$$

$$B = \sqrt{Z_{01}Z_{02}}\,\frac{\left(1 + S_{11} + S_{22} + \Delta S\right)}{2S_{21}}$$

$$C = \frac{1}{\sqrt{Z_{01}Z_{02}}}\,\frac{1 - S_{11} - S_{22} + \Delta S}{2S_{21}}$$

$$D = \sqrt{\frac{Z_{02}}{Z_{01}}}\,\frac{1 - S_{11} + S_{22} - \Delta S}{2S_{21}}$$

$$\Delta S = S_{11}S_{22} - S_{12}S_{21}$$

$$S_{11} = \frac{AZ_{02} + B - CZ_{01}Z_{02} - DZ_{01}}{AZ_{02} + B + CZ_{01}Z_{02} + DZ_{01}}$$

$$S_{12} = \frac{2(AD - BC)\sqrt{Z_{01}Z_{02}}}{AZ_{02} + B + CZ_{01}Z_{02} + DZ_{01}}$$

$$S_{21} = \frac{2\sqrt{Z_{01}Z_{02}}}{AZ_{02} + B + CZ_{01}Z_{02} + DZ_{01}}$$

$$S_{22} = \frac{-AZ_{02} + B - CZ_{01}Z_{02} + DZ_{01}}{AZ_{02} + B + CZ_{01}Z_{02} + DZ_{01}}$$

Analiza pe mod par/impar

Analiza pe mod par/impar (even/odd)

- utila/necesara pentru multiporti
- exemplu, rezistori, circuit cu 2 porturi

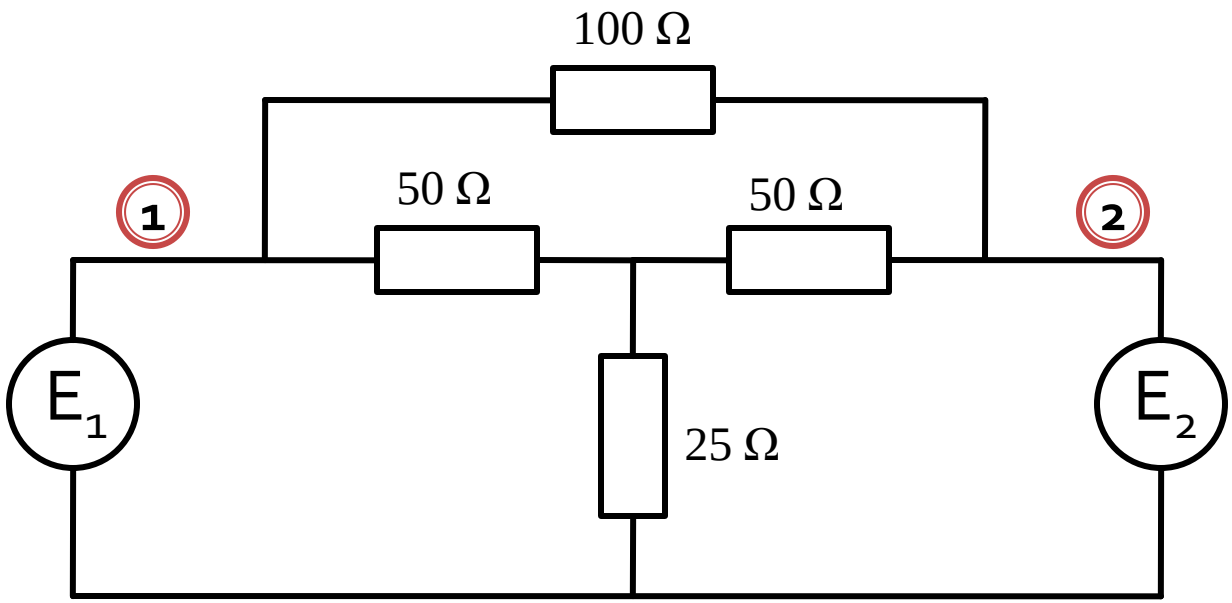

Analiza pe mod par/impar (even/odd)

- presupunem ca doresc Y_{11}
- $E_2 = 0$

$$Y_{11} = \left.\frac{I_1}{V_1}\right|_{V_2=0}$$

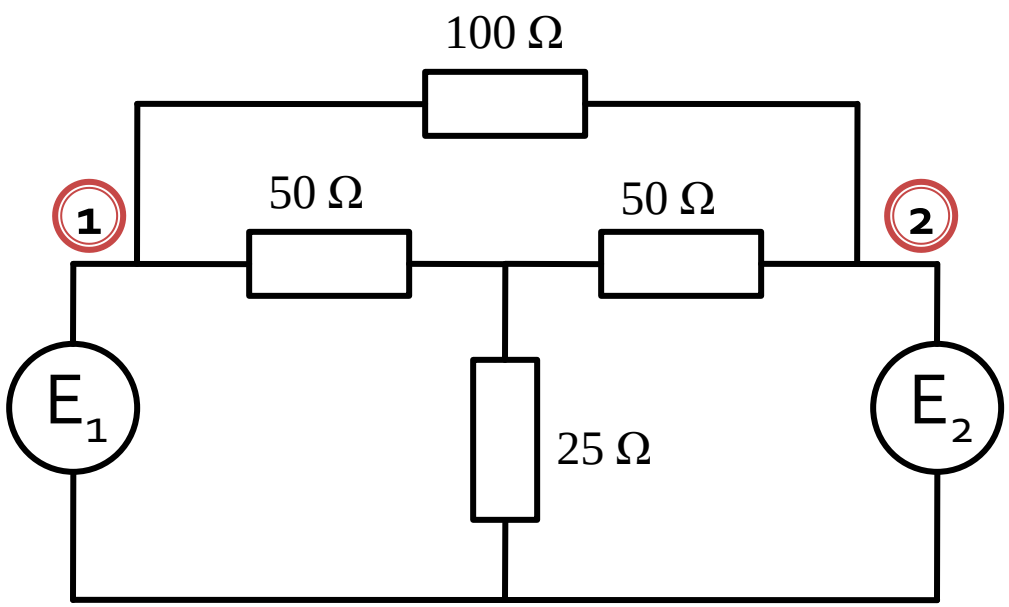

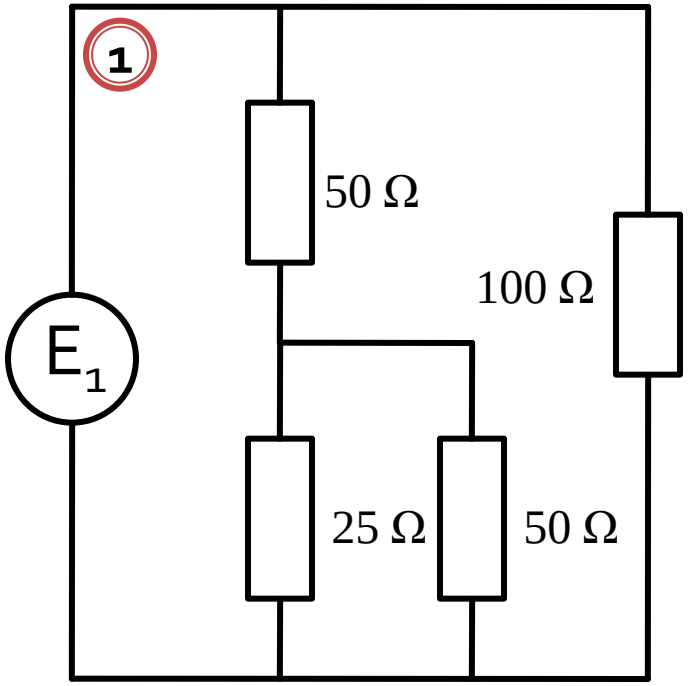

$$R_{ech} = 100\Omega \,||\, (50\Omega + 25\Omega \,||\, 50\Omega) =$$
$$= 100\Omega \,||\, (50\Omega + 16.67\Omega) = 100\Omega \,||\, 66.67\Omega = 40\Omega$$

$$Y_{11} = \left.\frac{I_1}{V_1}\right|_{V_2=0} = 0.025S$$

Analiza pe mod par/impar (even/odd)

- analiza pe mod par/impar beneficiaza de existenta in circuit a unor plane de simetrie
  - initiale
  - create

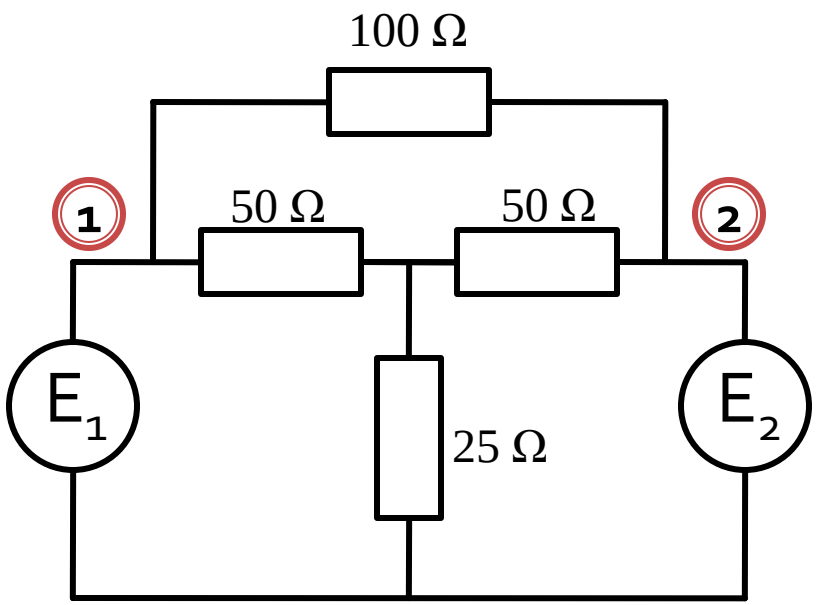

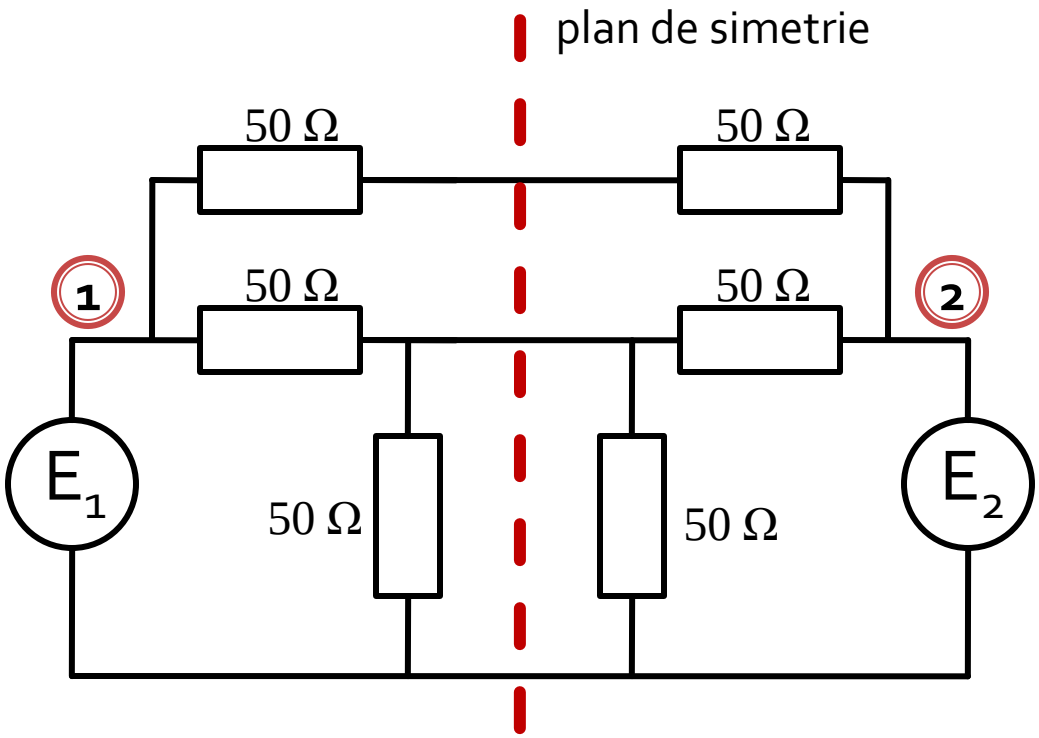

Analiza pe mod par/impar (even/odd)

- la atacul porturilor cu surse simetrice/antisimetrice planele de simetrie se transforma in
  - gol virtual
  - masa virtuala

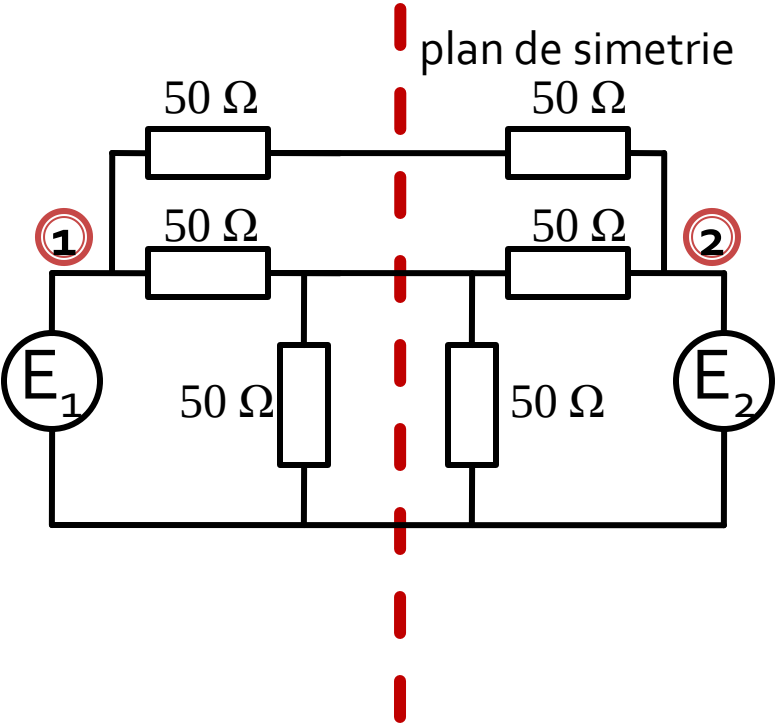

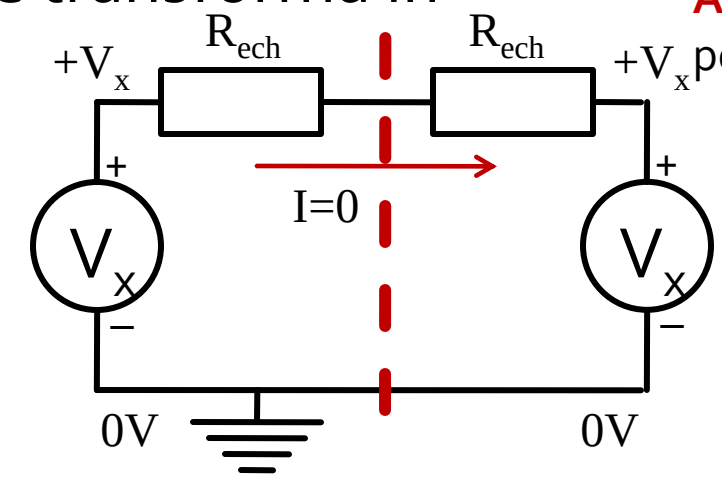

Aceeasi polaritate pentru surse

$$I = 0, \forall V_x$$

plan de simetrie **gol**

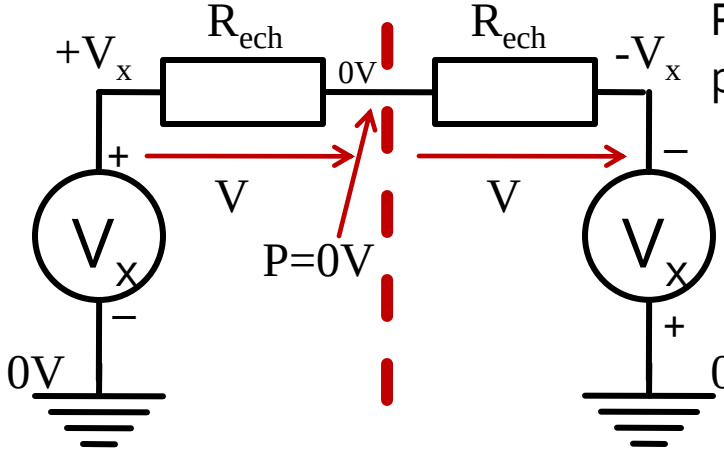

Polaritate **diferita** pentru surse

$$P = 0, \forall V_x$$

plan de simetrie **masa**

Analiza pe mod par/impar (even/odd)

- orice combinatie de 2 surse poate fi echivalata pentru circuitele liniare cu o suprapunere:
  - o sursa simetrica
  - o sursa antisimetrica

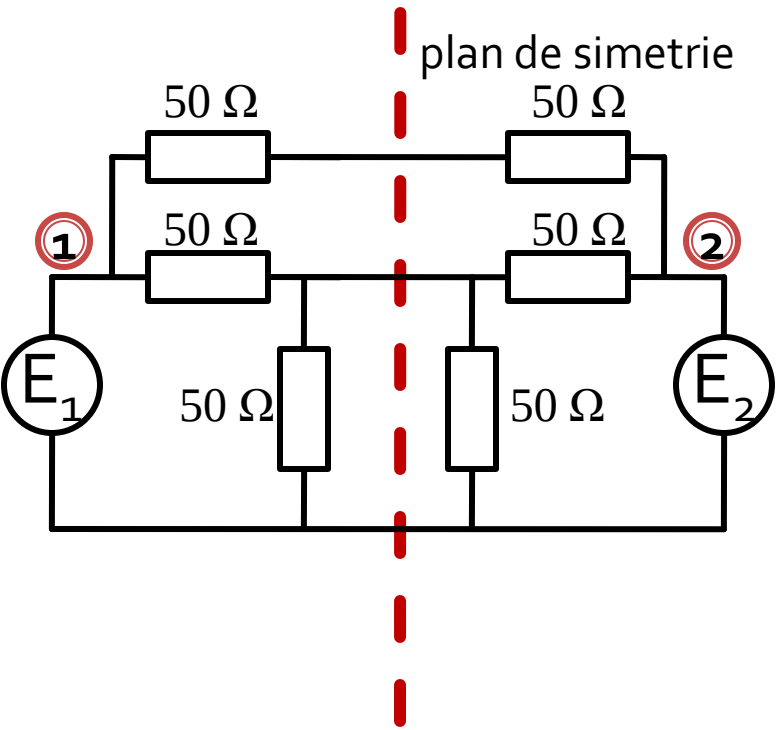

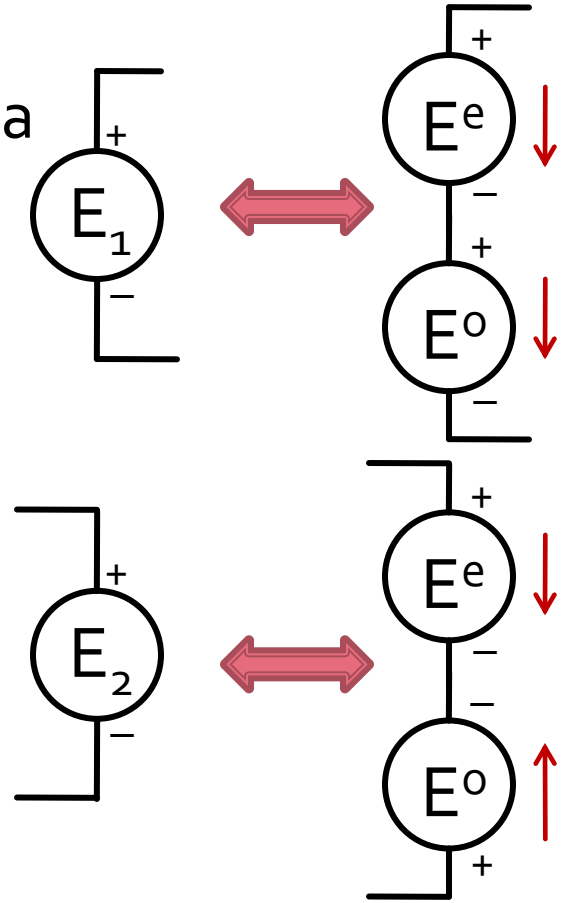

$$E_1 = E^e + E^o$$

$$E_2 = E^e - E^o$$

$$E^e = \frac{E_1 + E_2}{2}$$

$$E^o = \frac{E_1 - E_2}{2}$$

Analiza pe mod par/impar (even/odd)

- In circuite liniare putem aplica suprapunerea efectelor

Efect (Sursa1 + Sursa2) = Efect (Sursa1) + Efect (Sursa2)

Efect (PAR+ IMPAR) = Efect (PAR) + Efect (IMPAR)

OARECARE

Putem beneficia de avantajele simetriilor!!

Analiza pe mod par/impar (even/odd)

- exemplu

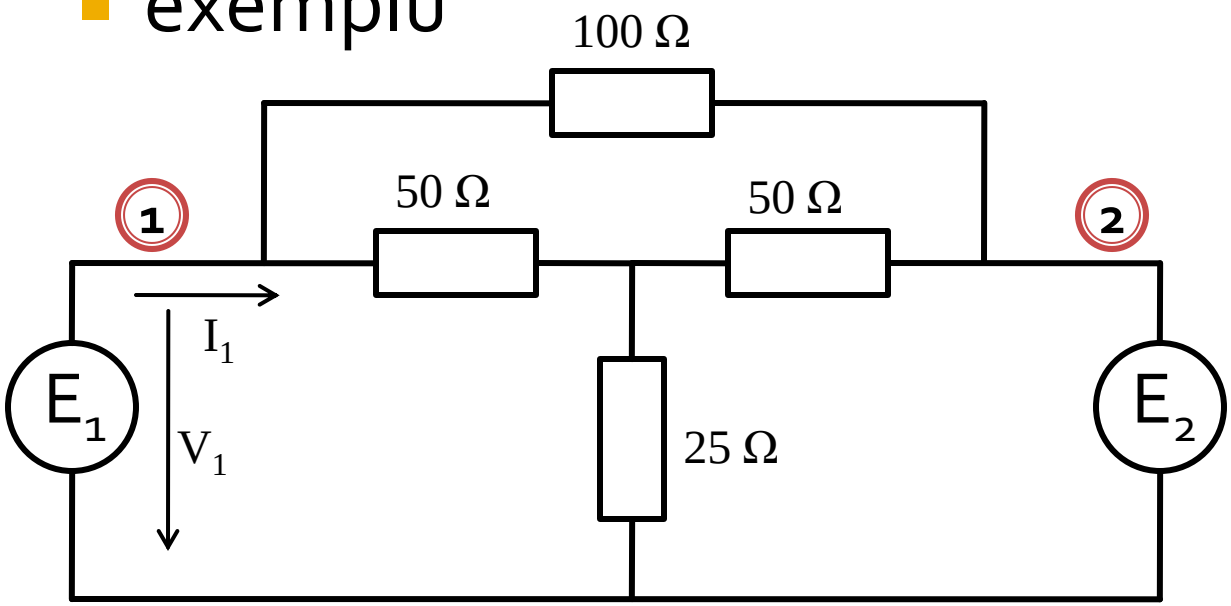

$$Y_{11} = \left.\frac{I_1}{V_1}\right|_{V_2=0}$$

$$V_2 \equiv E_2 = 0 \Rightarrow \quad E^e = \frac{E_1}{2} \qquad E^o = \frac{E_1}{2}$$

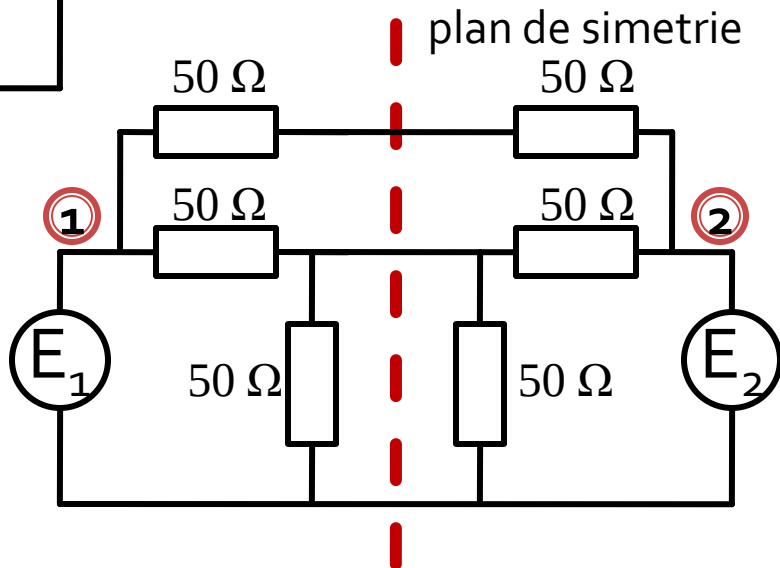

Analiza pe mod par/impar (even/odd)

- analiza pe mod par/impar

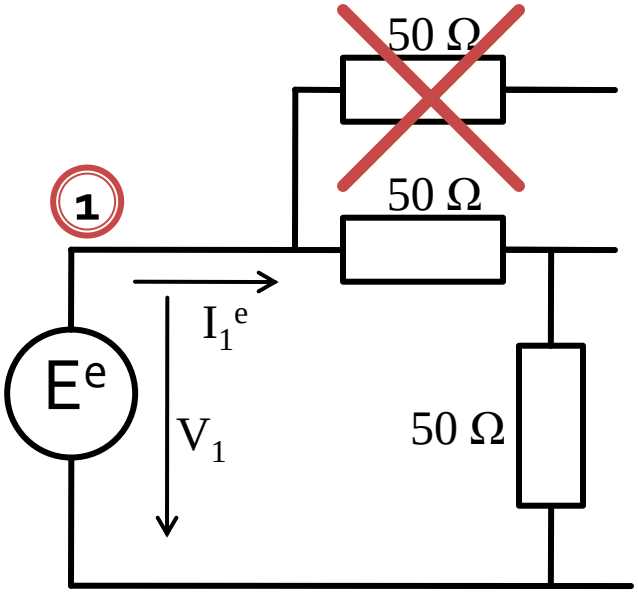

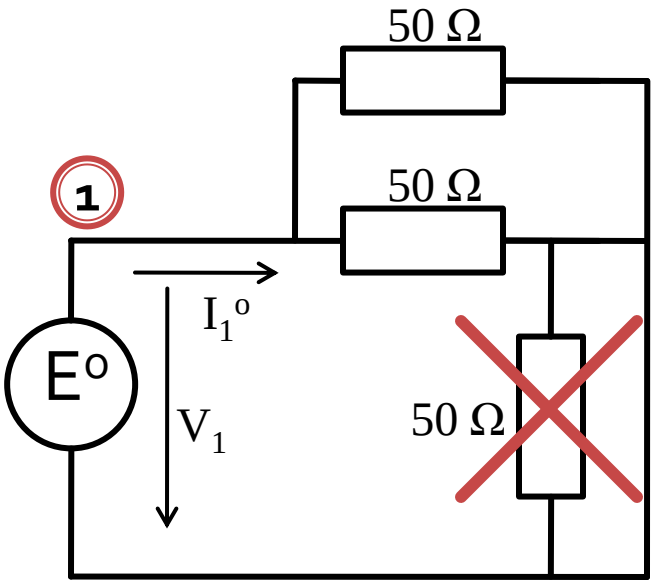

$$R_{ech}^{e} = 50\Omega + 50\Omega = 100\Omega$$

$$I_1^e = \frac{E^e}{R_{ech}^e} = \frac{E_1/2}{100\Omega} = \frac{E_1}{200\Omega}$$

PAR → plan de simetrie **gol**

$$R_{ech}^{o} = 50\Omega \,||\, 50\Omega = 25\Omega$$

$$I_1^o = \frac{E^o}{R_{ech}^o} = \frac{E_1/2}{25\Omega} = \frac{E_1}{50\Omega}$$

IMPAR → plan de simetrie **masa**

Analiza pe mod par/impar (even/odd)

- suprapunerea efectelor

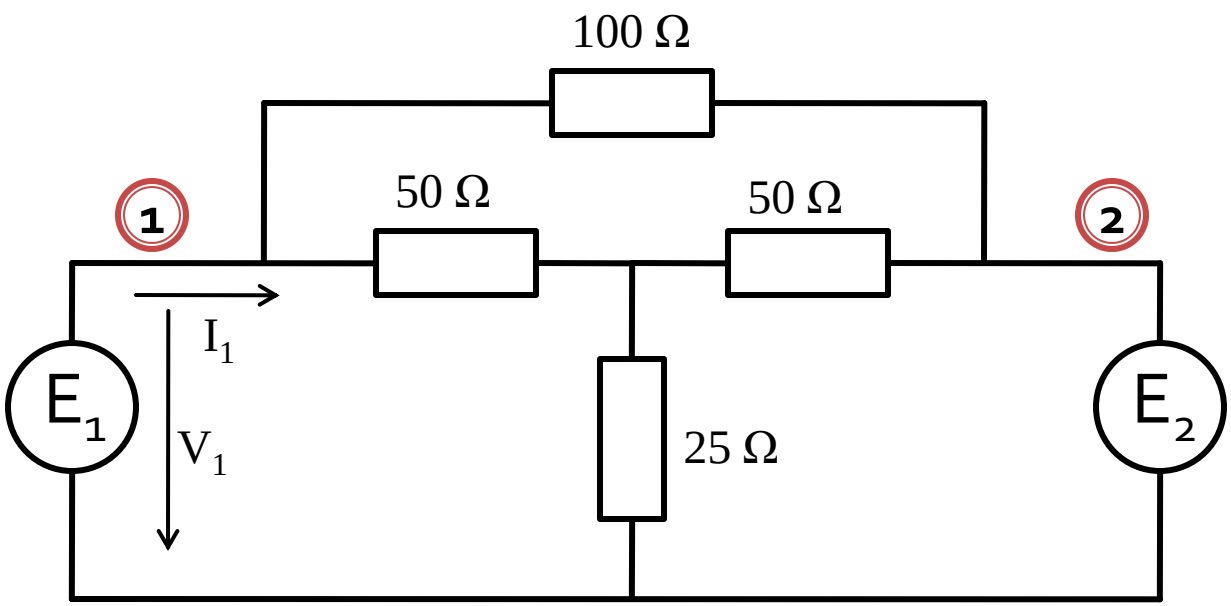

$$I_1 = I_1^e + I_1^o$$

$$V_1 = V_1^e + V_1^o$$

$$I_1 = I_1^e + I_1^o = \frac{E_1}{200\Omega} + \frac{E_1}{50\Omega} = \frac{E_1}{40\Omega}$$

$$V_1 = V_1^e + V_1^o = E_1$$

$$Y_{11} = \frac{I_1}{V_1} = \frac{1}{40\Omega} = 0.025S$$

Analiza pe mod par/impar (even/odd)

- In circuite liniare putem aplica suprapunerea efectelor
- avantaje
  - reducerea complexitatii circuitului
  - reducerea numarului de porturi (**principalul** avantaj)

Efect (PAR+ IMPAR) = Efect (PAR) + Efect (IMPAR)

Putem beneficia de avantajele simetriilor!!

Contact

- Laboratorul de microunde si optoelectronica
- http://rf-opto.etti.tuiasi.ro
- rdamian@etti.tuiasi.ro